AXIS D2050-VE Network Radar Detector

User Manual

AXIS D2050-VE Network Radar Detector

Table of Contents

Solution overview 3
Product overview 4
Where to install the product 4
Mounting direction 5
Mounting height 5
How to access the product 6
How to access the product from a browser 6
About secure passwords 6
Setup 8
About the product's built-in help 8
Configure the detector 8
How to configure the detector 9
How to install multiple detectors 9
About events 9
How to record video from a camera when motion is detected 10
How to record radar data when motion is detected 10
How to turn on a light when motion is detected 11
How to control a PTZ camera with the detector 11
About detection zones 11
How to minimize false alarms 12
Troubleshooting 14
How to reset to factory default settings 14
How to check the current firmware 14
How to upgrade the firmware 14
Technical issues, clues and solutions 15
Performance considerations 16
Specifications 17
SD card slot 17
Buttons 17
Connectors 17
Operating conditions 19
Power consumption 19

Solution overview

Solution overview

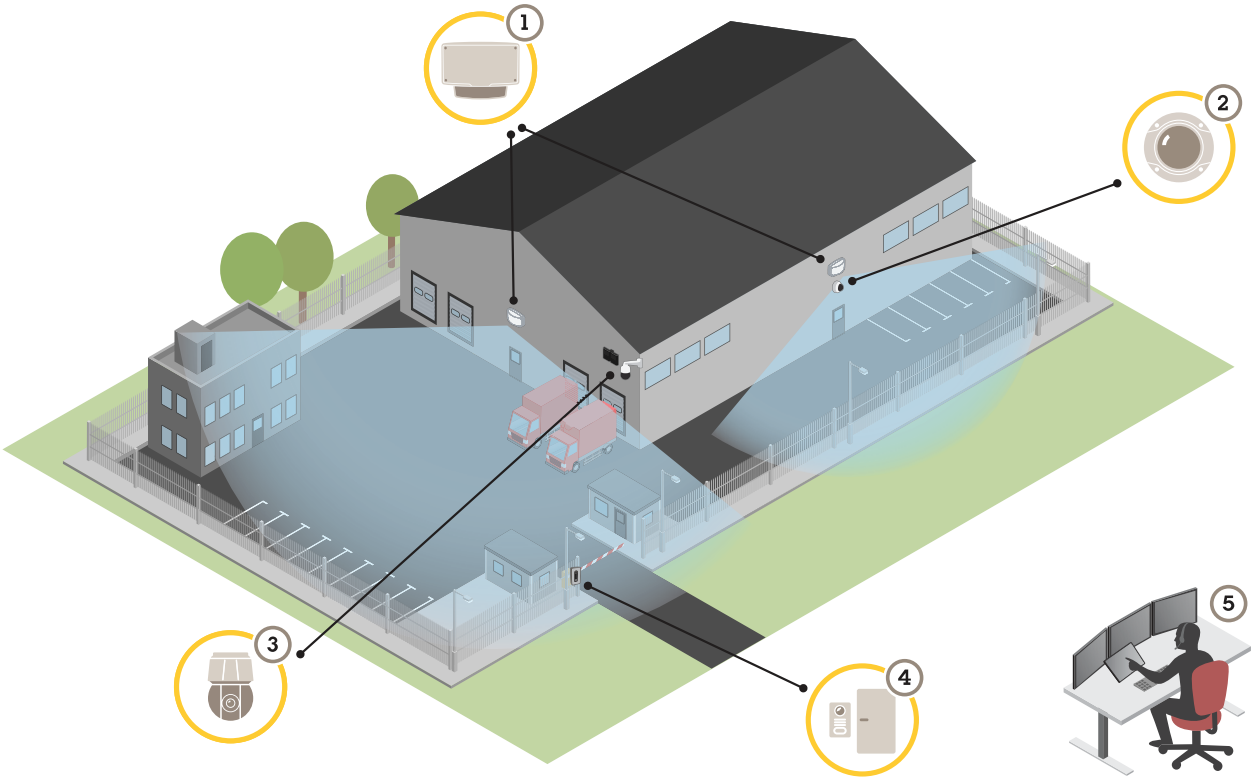

1 *AXIS D2050-VE*
2 *Fixed dome camera*
3 *PTZ camera and illuminator*
4 *Door controller*
5 *Surveillance center*

Product overview

Product overview

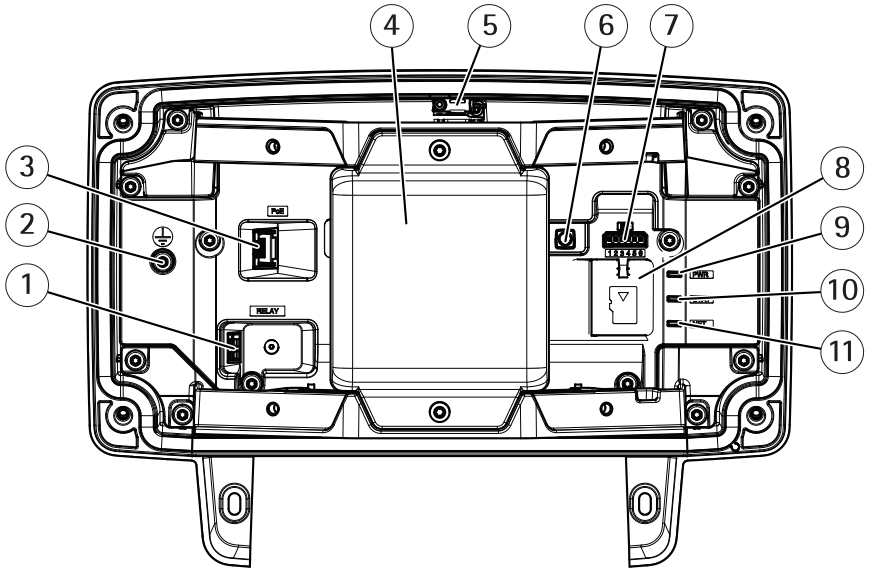

1 *Relay connector*
2 *Grounding screw*
3 *Network connector*
4 *Radar module*
5 *Intrusion alarm switch*
6 *Control button*
7 *I/O connector*
8 *microSD card slot*
9 *Power LED*
10 *Status LED*
11 *Network LED*

Where to install the product

The detector is intended for monitoring open areas. Any solid object (such as a tree or a bush) in the coverage area will create a blind spot (radar shadow) behind it.

Install the detector on a pole, or on a spot on a wall where there are no other objects or installations close to it.

To be able to correctly identify movement in the coverage area, the detector needs to be installed on a stable mount. Do not install the detector on a swaying pole.

If two radar detectors of are mounted close together they may interfere with each other, see *How to install multiple detectors on page 9*.

At the recommended mounting height, the near detection limit is 4.5 m (15 ft).

If there are a lot of metal objects in the field of view there will be a lot of reflections impacting the performance.

Note

Do not repaint the detector. The paint may seriously impact the detector's performance.

Product overview

Mounting direction

The detector covers an angle of ±60° from its central axis. This means that if you mount it on a wall there is a blind spot to each side of the detector.

To cover the wall you can move the radar module inside the detector.

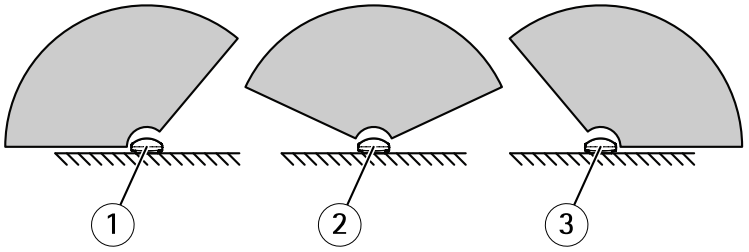

1 *-25° mounting direction*
2 *0° mounting direction*
3 *25° mounting direction*

Mounting height

For optimal performance, install the detector 3.5 m (11 ft) above ground.

Note

If you install the detector at a different height, enter the actual mounting height in the product's web pages before calibrating the radar.

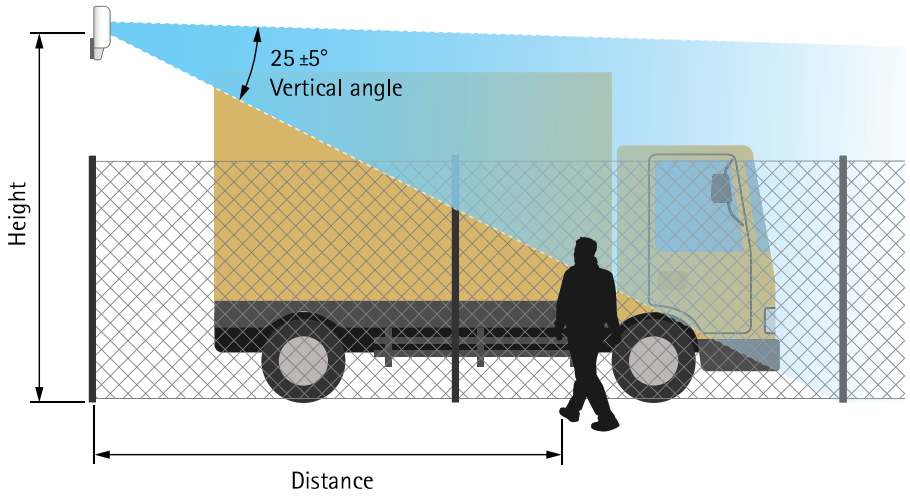

The following table shows the detection range at different mounting heights when detecting a 1.8 m (6 ft) tall person walking.

Mounting height	**3.5 m (11 ft)**	**4 m (13 ft)**	**4.5 m (15 ft)**	**5 m (16 ft)**
Near detection limit	4.5 m (15 ft)	6 m (20 ft)	7 m (23 ft)	8.5 m (28 ft)
Far detection limit (max. values)	49 m (161 ft)	51 m (167 ft)	51 m (167 ft)	52 m (171 ft)

How to access the product

AXIS IP Utility and AXIS Device Manager are recommended methods for finding Axis products on the network and assigning them IP addresses in Windows®. Both applications are free and can be downloaded from *axis.com/support*

The product can be used with the following browsers:

- Windows®: Chrome™ (recommended), Firefox®, Edge®, or Opera®
- OS X®: Chrome™ (recommended) or Safari®
- Other operating systems: Chrome™ or Firefox®.

If you need more information about recommended browsers, go to *axis.com/browser-support*

How to access the product from a browser

1. Start a web browser.
2. Enter the IP address or host name of the Axis product in the browser's address field.

   To access the product from a Mac computer (OS X), go to Safari, click on Bonjour and select the product from the drop-down list. To add Bonjour as a browser bookmark, go to **Safari > Preferences**.

   If you do not know the IP address, use AXIS IP Utility to locate the product on the network. For information about how to discover and assign an IP address, see the document *How to assign an IP address and access your device* on the product page at *axis.com*.
3. Enter your username and password. If this is the first time the product is accessed, the root password must first be configured.
4. The product's live view page opens in your browser.

About secure passwords

Important

Axis devices send the initially set password in clear text over the network. To protect your device after the first login, set up a secure and encrypted HTTPS connection and then change the password.

The device password is the primary protection for the data and services. Axis devices do not impose a password policy as they may be used in various types of installations. To protect your data we recommend that you:

- Change the default password that comes with each device.
- Use a password with at least 8 characters, preferably created by a password generator.
- Don't expose the password.
- Change the password at a recurring interval, at least once a year.

Set a secure password for the root account

Important

The default administrator username is **root**. If the password for root is lost, reset the device to factory default settings.

1. Type a password. Follow the instructions about secure passwords. See *About secure passwords on page 6*.
2. Retype the password to confirm the spelling.

3. Click **Create login**. The password has now been configured.

Setup

About the product's built-in help

You can access the built-in help from the product's webpage. The help provides more detailed information on the product's features and their settings.

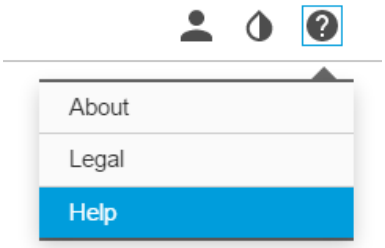

Configure the detector

The detector is ready to use as soon as it is installed. The default live view will show the radar coverage and any detected movement, and you can add detection zones and action rules right away.

To make it easier to see where objects are moving, you can upload a reference map, for example a ground plan or an aerial photo, that shows the area covered by the radar detector.

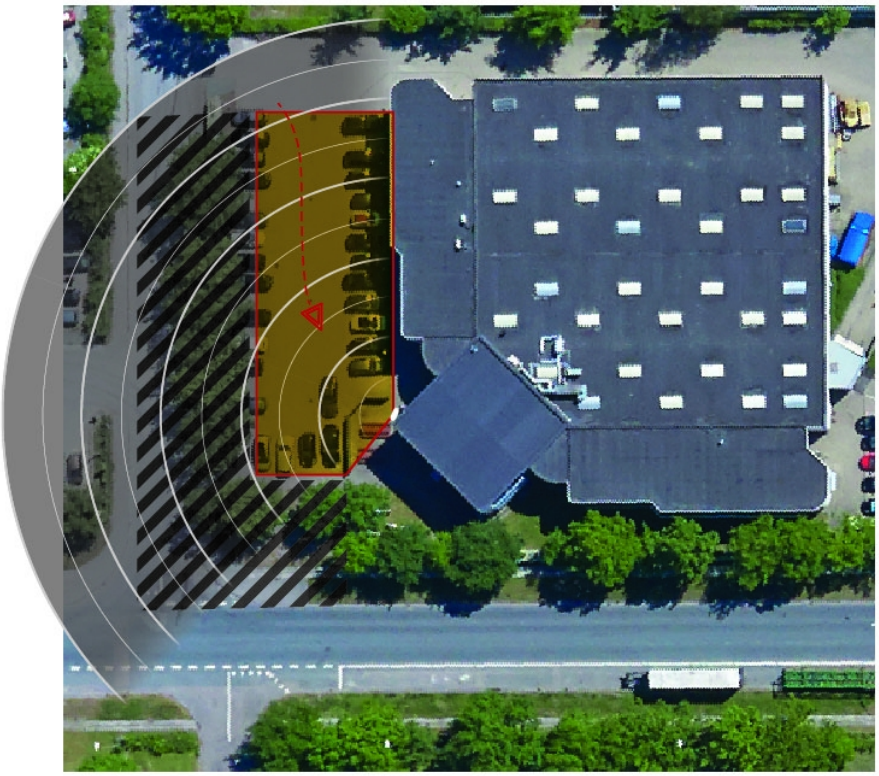

Image requirements:

- Supported file formats are jpeg and png.
- Use an image with the same proportions (16:9) or resolution (1920x1080) as the live view. If the image is smaller it will be scaled to fit the window. If the proportions are wrong, the image will not fill the entire video stream.
- Crop the image to fit the coverage of the radar as closely as possible before uploading it.
- The orientation is not important, since the radar coverage shape will be moved to adapt to the image during calibration.

After uploading the reference map you need to calibrate the radar so that the actual radar coverage fits the position, direction and scale of the reference map.

There are two methods for calibrating the reference map:

- **Calibration using pins**: The calibration is performed in the web interface by dropping pins in know locations in the reference map and setting the distance between the pins.

  When calibrating using pins, you need to select the mounting position of the radar module inside the detector.

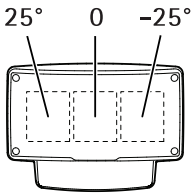

- **Calibration using tracks**: The calibration method requires a person to move in front of the radar.

  You can do this yourself while accessing the web interface from a mobile device, or have someone else move and follow your instructions.

  When moving around in the different steps, move to places that are easy to find in the reference map.

How to configure the detector

1. To upload a reference map, go to **Settings > Radar > Reference map**. Select **Browse** to find an image file, and select **Upload** to place the image in the live view.
2. To calibrate the reference map, go to **Settings > Radar > Reference map calibration**. Select **Start calibration** and follow the instructions.

How to install multiple detectors

If two radar detectors of are mounted close together they may interfere with each other. To avoid problems, select different channels for the detectors.

1. Go to **Settings > Radar > General** and select **Channel**.

About events

The event pages allow you to configure your product to perform actions when different events occur. For example, the product can start a recording or send an email notification when motion is detected. The set of conditions that defines how and when the action is triggered is called an action rule.

How to record video from a camera when motion is detected

This example explains how to set up the detector and a camera so that the camera starts recording to the SD card five seconds before the detector detects motion and to stop one minute after.

Connect the devices:

1. Connect a cable from an I/O output on the detector to an I/O input on the camera.

Configure the I/O port of the detector:

2. Go to **Settings > System > I/O ports** and configure the I/O port as an output and select the normal state.

Create an action rule in the detector:

3. Go to **Settings > System > Events** and add an action rule.
4. Type a name for the action rule.
5. From the list of triggers, select **Detectors** and then select one of the **RMD** (Radar Motion Detection) include zones. To set up an include zone, see *Add an include zone on page 12*
6. From the list of actions, select **Output Port** and then select the port that is connected to the camera.
7. Set the **Duration** to **Go to opposite state when the rule is no longer active**.
8. Click **Ok**.

Configure the I/O port of the camera:

9. Go to **Settings > System > I/O ports** and configure the I/O port as an input and select the normal state.

Create an action rule in the camera:

10. Go to **Settings > System > Events** and add an action rule.
11. Type a name for the action rule.
12. From the list of triggers, select **Digital Input Port** and then select the port that should trigger the rule.
13. From the list of actions, select **Record video**.
14. Select an existing stream profile or create a new one.
15. Set the pre-trigger time to 5 seconds.
16. Set the post-trigger time to 60 seconds.
17. Select **SD card** from the list of storage options.
18. Click **Ok**.

How to record radar data when motion is detected

This example explains how to set up the detector to start recording to the SD card five seconds before it detects motion and to stop one minute after.

The recording will show the reference map with the trail of the moving object.

Create an action rule:

1. Go to **Settings > System > Events** and add an action rule.
2. Type a name for the action rule.

3. From the list of triggers, select **Detectors** and then select one of the **RMD** (Radar Motion Detection) include zones. To set up an include zone, see *Add an include zone on page 12*
4. From the list of actions, select **Record video**.
5. Select an existing stream profile or create a new one.
6. Set the pre-trigger time to 5 seconds.
7. Set the post-trigger time to 60 seconds.
8. Select **SD card** from the list of storage options.
9. Click **Ok**.

How to turn on a light when motion is detected

Turning on a light when an intruder enters the detection zone can have a deterring effect, and will also improve the image quality of a visual camera recording the intrusion.

This example explains how to set up the detector and an illuminator so that the illuminator turns on when the detector detects motion and turns off after one minute.

Connect the devices:

1. Connect one of the illuminator cables to the power supply via the relay port on the detector. Connect the other cable directly between the power supply and the illuminator.

Configure the relay port of the detector:

2. Go to **Settings > System > I/O ports** and select **Open circuit** as the normal state.

Create an action rule in the detector:

3. Go to **Settings > System > Events** and add an action rule.
4. Type a name for the action rule.
5. From the list of triggers, select **Detectors** and then select one of the **RMD** (Radar Motion Detection) include zones. To set up an include zone, see *Add an include zone on page 12*
6. From the list of actions, select **Output Port** and then select the relay port.
7. Select **Active**.
8. Set the **Duration** to **Go to opposite state after 1 minute**.
9. Click **Ok**.

How to control a PTZ camera with the detector

It is possible to use the information about objects' positions from the detector to make a PTZ camera track objects.

To do this, install the application AXIS Radar Autotracking for PTZ on your VMS server (or another computer with access to both the camera and the detector), and follow the instructions in the application.

To download AXIS Radar Autotracking for PTZ, go to *axis.com*

About detection zones

To determine where to detect motion, you can add multiple zones. Different zones can be used to trigger different actions.

There are two types of zones:

- An **include zone** is an area in which moving objects will trigger action rules. The default include zone matches the entire area covered by the detector.
- An **exclude zone** is an area in which moving objects will be ignored. Use exclude zones if there are areas inside an include zone that trigger a lot of unwanted alarms.

Add an include zone

1. Go to **Settings > RMD zones** and click +
2. Select **Include zone**.
3. Select ⚙ to modify the settings of the zone. For more information, see the product's built in help.
4. Modify the shape of the include zone, see *Modify a detection zone on page 12*

Add an exclude zone

1. Go to **Settings > RMD zones** and click +
2. Select **Exclude zone**.
3. Modify the shape of the exclude zone, see *Modify a detection zone on page 12*

Modify a detection zone

Use the mouse to move and shape the zone so that it covers the desired part of the reference map.

- To add a new corner, click on the zone border. Drag the corner to the desired position.
- To remove a corner, right-click on the corner.
- To move a corner, click and drag the corner to the new position.
- To move the zone, place the pointer inside the zone and drag the zone to the new position.

How to minimize false alarms

If you notice that you get too many false alarms, you can filter out certain types of movement or objects, or change the coverage. Test which setting works best for your environment.

- Modify the include and exclude zones:

  If the include zone includes hard surfaces, such as a metal wall, there may be reflections that causes multiple detections for a single physical object. In this case, modify the include zone, see *Modify a detection zone on page 12*, or add an exclude zone that masks everything behind the surface, see *Add an exclude zone on page 12*

- Filter on movement:

  Go to **Settings > Radar > Detection** and select **Ignore swaying objects**. This setting will minimize false alarms from trees, bushes, and flagpoles in the coverage zone.

- Filter on time:

  Go to **Settings > RMD zones** and select a zone to modify it's settings.

  Enable **Short-lived object** and set a delay time from when the radar starts tracking an object until it can trigger and alarm. The timer starts when the radar first detects the object, not when the object enters the include zone.

Setup

- Filter on object type:

  The detector will classify objects depending on the radar echo that they produce. If it can't determine the object type, the object will be classified as **Unidentified**.

  Go to **Settings > RMD zones** and select a zone to modify it's settings.

  To avoid triggering on specific object types, enable the filter and deselect the object types that should not trigger events in this zone.

Troubleshooting

If you can't find what you're looking for here, try the troubleshooting section at *axis.com/support*

How to reset to factory default settings

Important

Reset to factory default should be used with caution. A reset to factory default resets all settings, including the IP address, to the factory default values.

Note

The camera has been preconfigured with AXIS License Plate Verifier. If you reset to factory default, you need to reinstall the license key. See .

To reset the product to the factory default settings:

1. Disconnect power from the product.
2. Press and hold the control button while reconnecting power. See *Product overview on page 4*.
3. Keep the control button pressed for 15–30 seconds until the status LED indicator flashes amber.
4. Release the control button. The process is complete when the status LED indicator turns green. The product has been reset to the factory default settings. If no DHCP server is available on the network, the default IP address is `192.168.0.90`
5. Use the installation and management software tools to assign an IP address, set the password, and access the video stream.

   The installation and management software tools are available from the support pages on *axis.com/support*

It is also possible to reset parameters to factory default through the web interface. Go to **Settings > System > Maintenance** and click **Default**.

How to check the current firmware

Firmware is the software that determines the functionality of network devices. One of your first actions when troubleshooting a problem should be to check the current firmware version. The latest version may contain a correction that fixes your particular problem.

To check the current firmware:

1. Go to the product's webpage.
2. Click on the help menu.
3. Click **About**.

How to upgrade the firmware

Important

Preconfigured and customized settings are saved when the firmware is upgraded (provided that the features are available in the new firmware) although this is not guaranteed by Axis Communications AB.

Important

Make sure the product remains connected to the power source throughout the upgrade process.

Troubleshooting

Note

When you upgrade the product with the latest firmware, the product receives the latest functionality available. Always read the upgrade instructions and release notes available with each new release before upgrading the firmware. To find the latest firmware and the release notes, go to *axis.com/support/firmware*

1. Download the latest firmware file to your computer, available free of charge at *axis.com/support/firmware*
2. Log in to the product as an administrator.
3. Go to **Settings > System > Maintenance**. Follow the instructions on the page. When the upgrade has finished, the product restarts automatically.

Technical issues, clues and solutions

If you can't find what you're looking for here, try the troubleshooting section at *axis.com/support*

Problems upgrading the firmware	
Firmware upgrade failure	If the firmware upgrade fails, the product reloads the previous firmware. The most common reason is that the wrong firmware file has been uploaded. Check that the name of the firmware file corresponds to your product and try again.

Problems setting the IP address	
The product is located on a different subnet	If the IP address intended for the product and the IP address of the computer used to access the product are located on different subnets, you cannot set the IP address. Contact your network administrator to obtain an IP address.
The IP address is being used by another device	Disconnect the Axis product from the network. Run the ping command (in a Command/DOS window, type `ping` and the IP address of the product): • If you receive: `Reply from <IP address>: bytes=32; time=10...` this means that the IP address may already be in use by another device on the network. Obtain a new IP address from the network administrator and reinstall the product. • If you receive: `Request timed out`, this means that the IP address is available for use with the Axis product. Check all cabling and reinstall the product.
Possible IP address conflict with another device on the same subnet	The static IP address in the Axis product is used before the DHCP server sets a dynamic address. This means that if the same default static IP address is also used by another device, there may be problems accessing the product.

The product cannot be accessed from a browser	
Cannot log in	When HTTPS is enabled, ensure that the correct protocol (HTTP or HTTPS) is used when attempting to log in. You may need to manually type `http` or `https` in the browser's address field. If the password for the user root is lost, the product must be reset to the factory default settings. See *How to reset to factory default settings on page 14*.
The IP address has been changed by DHCP	

The product is accessible locally but not externally	
Router configuration	Check that your router allows incoming data traffic to the Axis product. The router must support UPnP®.
Firewall protection	Check the Internet firewall with your network administrator.

Performance considerations

When setting up your system, it is important to consider how various settings and situations affect the performance. Some factors affect the amount of bandwidth (the bitrate) required, others can affect the frame rate, and some affect both. If the load on the CPU reaches its maximum, this also affects the frame rate.

The following factors are the most important to consider:

- High image resolution or lower compression levels result in images containing more data which in turn affects the bandwidth.
- Rotating the lens manually will result in better performance compared to rotating the image from the GUI.
- Access by large numbers of Motion JPEG or unicast H.264 clients affects the bandwidth.
- Simultaneous viewing of different streams (resolution, compression) by different clients affects both frame rate and bandwidth.

  Use identical streams wherever possible to maintain a high frame rate. Stream profiles can be used to ensure that streams are identical.
- Accessing Motion JPEG and H.264 video streams simultaneously affects both frame rate and bandwidth.
- Heavy usage of event settings affects the product's CPU load which in turn affects the frame rate.
- Using HTTPS may reduce frame rate, in particular if streaming Motion JPEG.
- Heavy network utilization due to poor infrastructure affects the bandwidth.
- Viewing on poorly performing client computers lowers perceived performance and affects frame rate.
- Running multiple AXIS Camera Application Platform (ACAP) applications simultaneously may affect the frame rate and the general performance.

Specifications

To find the latest version of the product's datasheet, go to the product page at *axis.com* and locate **Support & Documentation**.

LED Indicators

Status LED	Indication
Green	Steady green for normal operation.
Amber	Steady during startup. Flashes when restoring settings.

Network LED	Indication
Green	Steady for connection to a 100 Mbit/s network. Flashes for network activity.
Amber	Steady for connection to a 10 Mbit/s network. Flashes for network activity.
Unlit	No network connection.

Power LED	Indication
Green	Normal operation.
Amber	Flashes green/amber during firmware upgrade.

SD card slot

For SD card recommendations, see *axis.com*

microSD, microSDHC, and microSDXC Logos are trademarks of SD-3C LLC. microSD, microSDHC, microSDXC are trademarks or registered trademarks of SD-3C, LLC in the United States, other countries or both.

Buttons

Control button

For location of the control button, see *Product overview on page 4* .

The control button is used for:

- Resetting the product to factory default settings. See *page 14*.
- Connecting to an AXIS Video Hosting System service. See . To connect, press and hold the button for about 3 seconds until the Status LED flashes green.

Connectors

Network connector

RJ45 Ethernet connector with Power over Ethernet Plus (PoE+).

I/O connector

Use the I/O connector with external devices in combination with, for example, motion detection, event triggering, and alarm notifications. In addition to the 0 V DC reference point and power (DC output), the I/O connector provides the interface to:

Specifications

Digital input – For connecting devices that can toggle between an open and closed circuit, for example PIR sensors, door/window contacts, and glass break detectors.

Digital output – For connecting external devices such as relays and LEDs. Connected devices can be activated by the VAPIX® Application Programming Interface or from the product's webpage.

6-pin terminal block

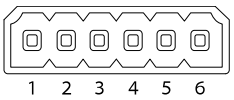

Function	Pin	Notes	Specifications
DC ground	1		0 V DC
DC output	2	Can be used to power auxiliary equipment. Note: This pin can only be used as power out.	12 V DC Max load = 50 mA
Configurable (Input or Output)	3–6	Digital input – Connect to pin 1 to activate, or leave floating (unconnected) to deactivate.	0 to max 30 V DC
		Digital output – Connect to pin 1 to activate, or leave floating (unconnected) to deactivate. If used with an inductive load, e.g., a relay, connect a diode in parallel with the load, to protect against voltage transients.	0 to max 30 V DC, open drain, 100 mA

Example

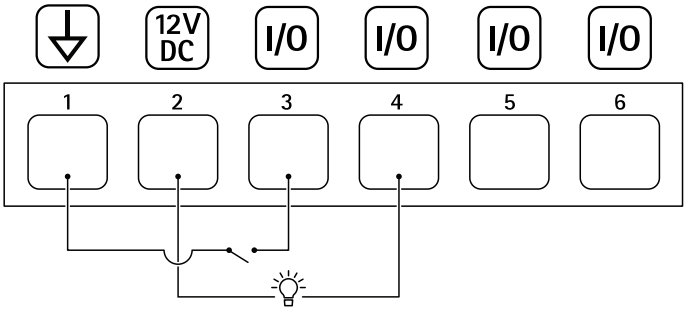

1 *DC ground*
2 *DC output 12 V, max 50 mA*
3 *I/O configured as input*
4 *I/O configured as output*
5 *Configurable I/O*
6 *Configurable I/O*

Relay connector

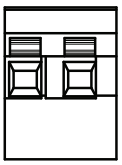

Specifications

⚠CAUTION

Use single core wires for the relay connector.

Function	Specifications
Type	Normally open
Rating	24 V DC
Max. current	5 A
Isolation from other circuitry	2.5 kV
Electrical endurance	24 V DC, 25 000 operations at +70°C (158 °F)

Operating conditions

Product	Classification	Temperature	Humidity
AXIS D2050-VE	IEC 60529 IP66 NEMA 250 Type 4X	-40 °C to 60 °C (-40 °F to 140 °F)	10–100% RH (condensing)

Power consumption

NOTICE

Use a Safety Extra Low Voltage (SELV) compliant limited power source (LPS) with either a rated output power limited to ≤100 W or a rated output current limited to ≤5 A.

Product	Power over Ethernet	Power
AXIS D2050-VE	IEEE 802.3at, Type 2 Class 4	Typical 9 W Max. 15 W

User Manual
AXIS D2050-VE Network Radar Detector
© Axis Communications AB, 2017 - 2018
Ver. M3.4
Date: June 2018
Part No. T10099502