mm [inch]

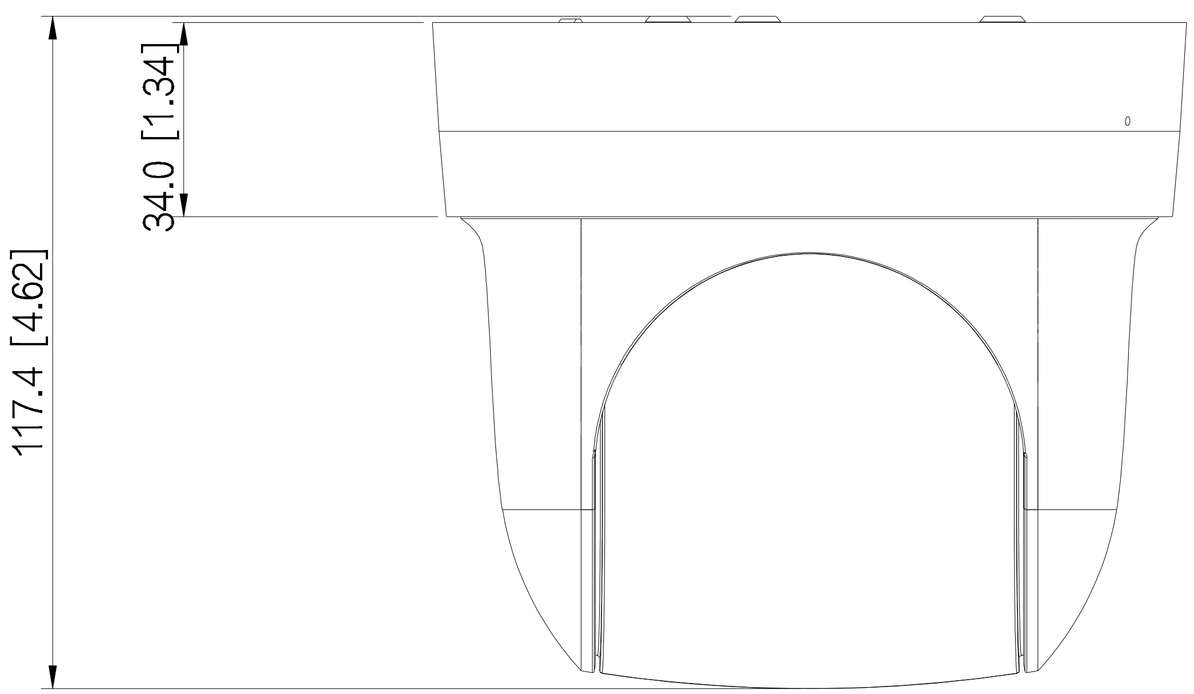
34.0 [1.34]
117.4 [4.62]

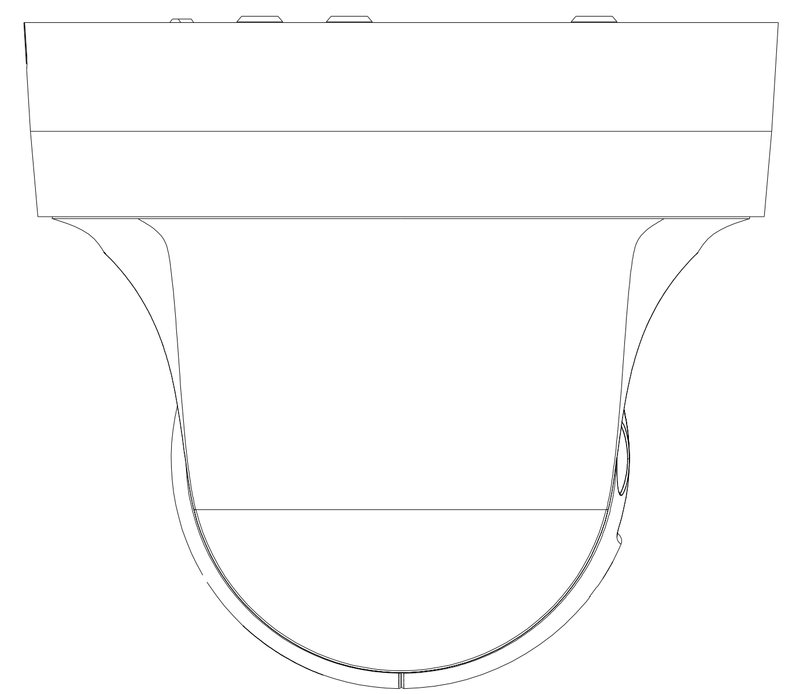

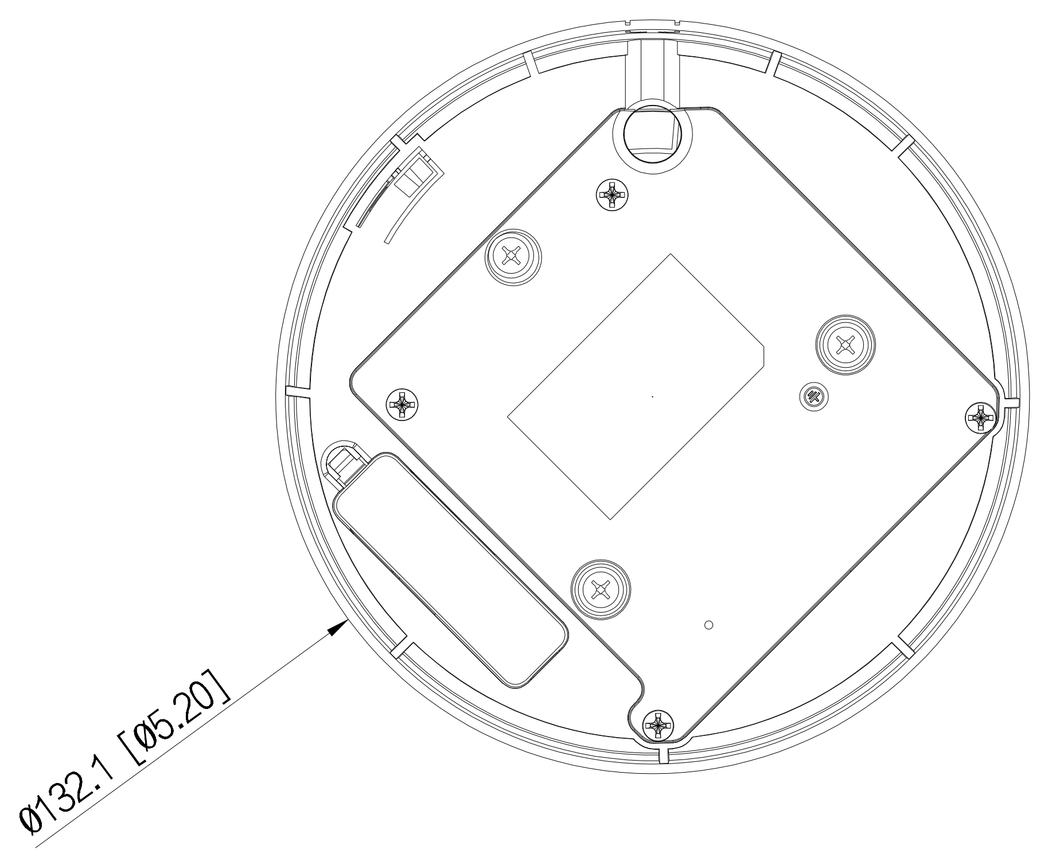
Ø132.1 [Ø5.20]

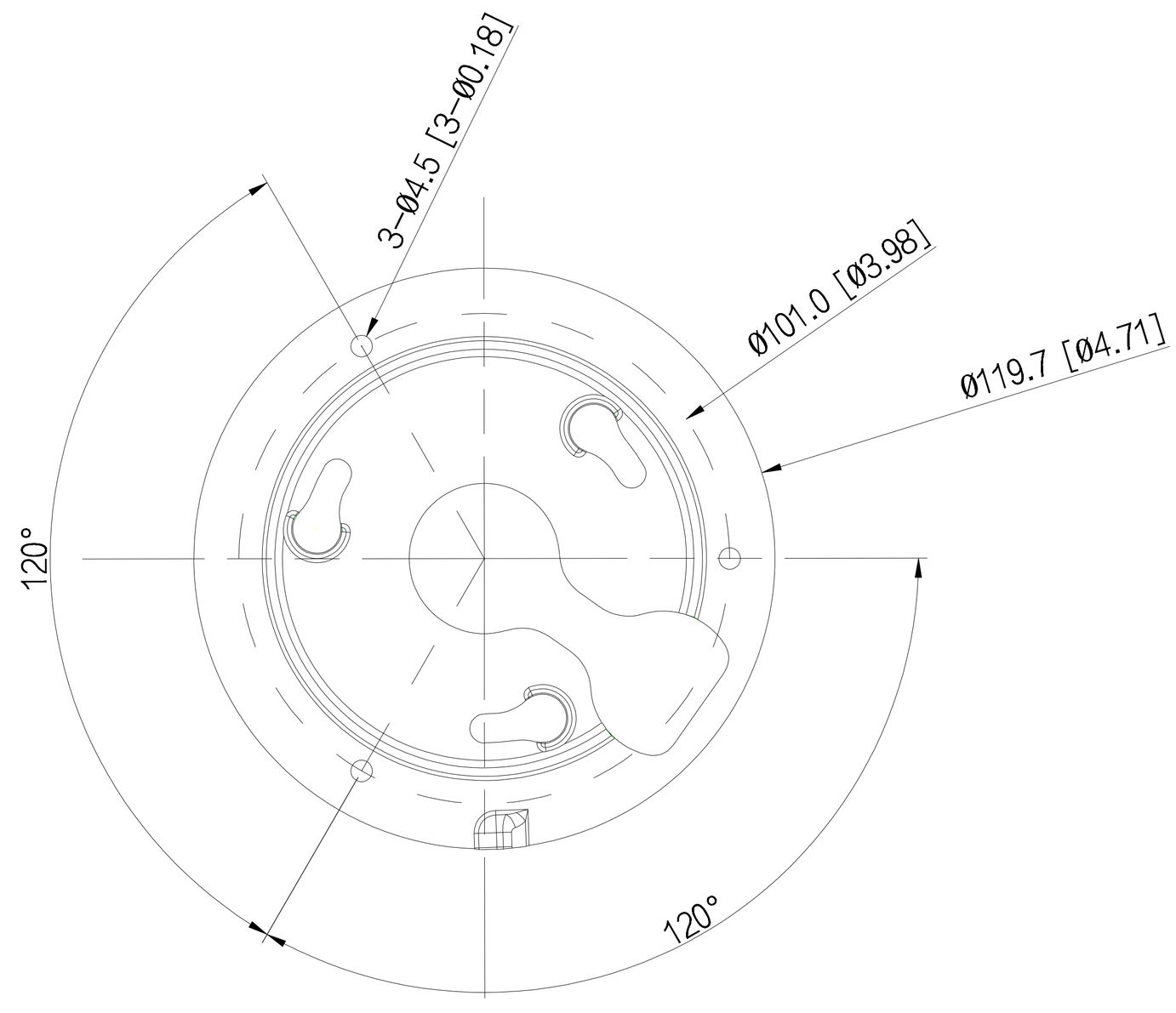
3-Ø4.5 [3-Ø0.18]
Ø101.0 [Ø3.98]
Ø119.7 [Ø4.71]
120°
120°