AKE Parking Guidance System
Ultrasonic Detector
Product Description

In case of any change on the product's model and appearance, the real object will prevail. Without affecting the product's functionalities, the Production Description is applicable from time to time. For details about the change, contract us.

Guangdong AKE Technology Co.,Ltd owns the copyright of the Production Description as well as the right of final explanation.

Released in April 2013 2nd Edition Printed in August 2013

Warning

- Only specialized personnel can install and maintain the equipment.
- Do not refit the equipment or install parts on it.
- The equipment should be provided with correct rated voltage.
- Before powering on the equipment, ensure that all cable connections are correct and all parts including the cabinet, doors and covers are restored to the normal position.
- We are not liable for any damage caused due to any violence against the Production Description.

Caution

- When connecting cables, ensure that the power is cut off. Hot-line part assembly may cause electric shock, which will result in permanent damage to the equipment, personal injury or even death.
- The equipment should be grounded in accordance with the national, regional and local regulations. A grounding failure may cause unstable communication of the equipment, personal injury or even death.

Contents

I.System Overview 1
1.Introduction 1
2.System Architecture 1
II.System Functions 2
1.Overview 2
2.Functions 2
III.Technical Specifications 2
IV.Appearance and Size 3
1.Appearance 3
2.Detail View 3
V.Installation and Cable Connection 4
1. Cable Connection Instructions 4
2.Precautions 5
VI.Operation Instructions 5
1.Address Setting 5
2.Offline Mode Setting 6
3.Communication Matched Impedance Setting 6
VII.Common Faults and Troubleshooting 6

I.System Overview

1.Introduction

AKE's parking guidance system is a set of system used for parking guidance for indoor parking. The system adopts ultrasonic detectors to detect the occupancy status of parking spaces as well as loop detectors to count the traffic at the entrances within the car park. It transmits data over the RS485 protocol to managers for real-time update of remaining parking spaces in all areas and release guidance information on indoor screens and entrance and exit screens to guide parking in all areas. The indicator above each parking space switches its status according to the detection result from the ultrasonic detector, which helps facilitate humanized parking guidance.

2.System Architecture

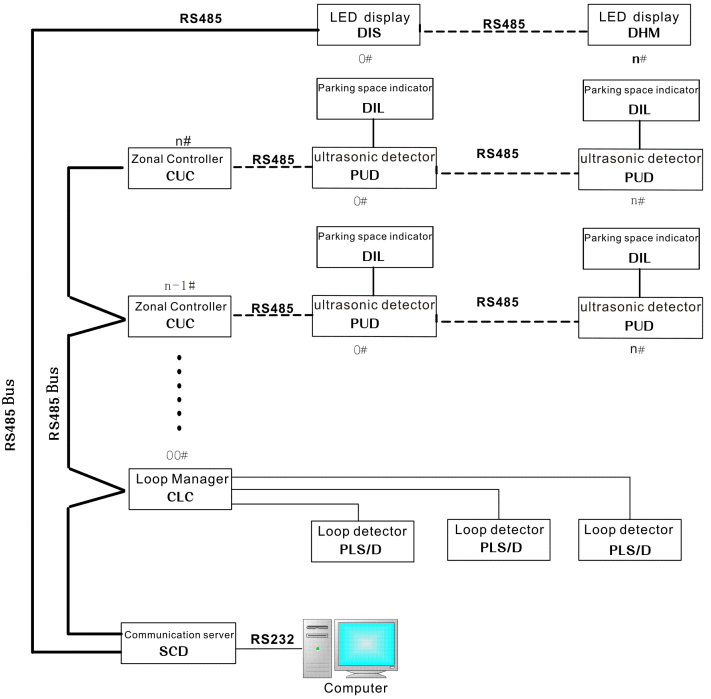

Figure 1.1 System Architecture

II.System Functions

1.Overview

The ultrasonic detector is non-contact measuring equipment that follows the working principle of ultrasonic distance measurement and measures distance based on the time difference caused after a whole process of emission of ultrasonic wave, reflection of measured object and reception of echo. The product can reliably detect whether a car is parked in a parking space by controlling two colored indicators and avoid false detection. In a word, it is preferred for parking space detectors in the parking guidance system.

Remarks: The Production Description is applicable to the products whose models are PU-001, P08 and PUD-11R.

2.Functions

No.	Function
1	Correct measuring of the distance between a detector and a reflector
2	Record keeping and saving of parking time
3	Remote setting of the height between a detector and the ground
4	Indicators' flashing control
5	Data saving in case of power-off
6	Single-colored indicator control
7	Two-colored indicator control

III.Technical Specifications

Power supply	DC18V–24V
Power consumption	≤0.5W
Detection mode	Ultrasonic wave
Distance	0.3m–4.5m
Scope of detection	±15°
Distance setting	Automatic
Working environment	Temperature: -10°C–55°C; Humidity: ≤ 90% RH (non-condensate)
Communication interface	RS485

Baud rate	9600 bps
Address coding	DIP setting
Size	105 x 105 x 61 (mm)
Weight	0.3 kg

IV.Appearance and Size

1.Appearance

Figure 4.1 Appearance of the Ultrasonic Detector

2.Detail View

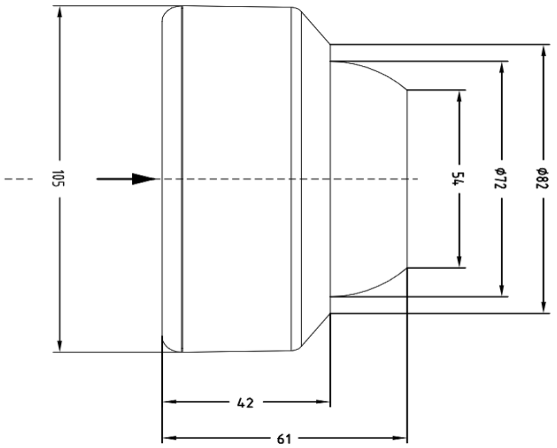

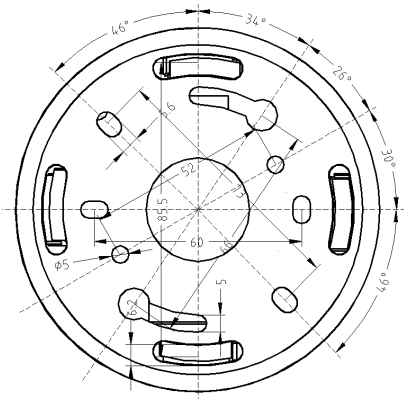

Figure 4.2 Detail View of the Ultrasonic Detector

V.Installation and Cable Connection

1.Cable Connection Instructions

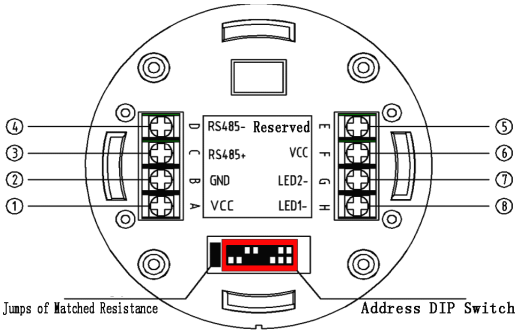

Figure 5.1 Cable Connection of the Ultrasonic Detector

No.	Cable Connection Instruction
①	Positive of the power unit (+): connected to the 24V output port of the ultrasonic detector controller.
②	Negative of the power unit (-): connected to the GND output port of the ultrasonic detector controller.
③	RS485+ (A+): connected to the downlink 485 A+ port of the ultrasonic detector controller.

④	RS485- (B-): connected to the downlink 485 B- port of the ultrasonic detector controller.
⑤	Reserved
⑥	Positive of the power unit (+): connected to the 24V port of the parking space indicator.
⑦	LED2-: connected to the R port (red indicator) of the parking space indicator.
⑧	LED1-: connected to the G port (green indicator) of the parking space indicator.

2.Precautions

(1) The ultrasonic detector adopts a daisy chain connection for RS485 communication. The communication cable is an RVS2 x 0.5 mm^2 twisted-pair cable. The connection scheme of " , +, *" is not allowed. During cable connection, pay attention to the positive and negative of the communication cable. The power cable is an RVV2 x 1.0 mm^2 sheathed cable.

(2) During installation, follow the construction drawing to properly set the specific addresses of ultrasonic detectors at each site.

(3) The ultrasonic detector should be vertically installed on the right upside of each parking space, with the distance from the ground of no more than 4.5 m (about 2.7 m in normal cases). There should not be any object between the detector and the ground, for example, water pipes and ventilation pipes. During installation, the base of the ultrasonic detector should be parallel to the ground.

(4) For the same detector controller, the addresses of ultrasonic detectors should not be repeated. Otherwise, their communication fails.

(5) The equipment should be powered on after a strict check on cable connections. This avoids an equipment damage caused by any incorrect cable connection.

(6) The equipment should not be exposed directly to the sun or installed in a moist and greasy environment.

VI.Operation Instructions

1.Address Setting

During installation, check whether all addresses are properly set. The valid address range is 00-31. The weights of bits 1 to 5 of an 8P DIP switch are 1, 2, 4, 8 and 16. When a bit is turned on, it is represented as 1. When the bit is turned off, it is represented as 0. The address of an ultrasonic detector equals to the sum of weights of all bits, that is, sum of values of all bits plus their weights. In the following example, the address is 0 x 1 + 0 x 2 + 1 x 4 + 1 x 8 + 0 x 16 = 12.

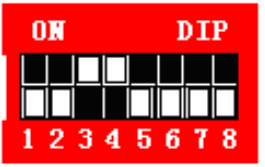

Figure 6.1 DIP Switch

2.Offline Mode Setting

For each ultrasonic detector, there is an offline mode control at the DIP switch (7th bit). When the bit is turned on, the offline mode is enabled. In the offline mode, the DIP switch will not be used for address setting. However, it is used to set the height between a detector and the ground. The weights of bits 1 to 6 are 1, 2, 4, 8, 16 and 32. When a bit is turned on, it is represented as 1. When the bit is turned off, it is represented as 0. The height set for an ultrasonic detector equals to the sum of weights of all bits, that is, sum of values of all bits plus their weights. The unit is 0.1 m.

3.Communication Matched Impedance Setting

For each ultrasonic detector, there is a communication matched impedance control at the DIP switch (8th bit). When the bit is turned on, it indicates that the matched impedance is connected. If the communication is stable on site, it is unnecessary to connect the matched impedance. If the communication is unstable, the matched impedance is connected at the very front and end of the RS485 bus of an ultrasonic detector.

VII.Common Faults and Troubleshooting

Fault Symptom	Analysis and Solution	Remarks
The indicator of the ultrasonic detector does not flash.	1.Check whether its power cable is properly connected. 2.Check whether its communication cable is properly connected.	1、The ultrasonic detector realizes centralized 24V power supply through a detector controller. 2、The indicator does not flash when the ultrasonic detector communicates.

The communication of the ultrasonic detector is offline.	1.Check whether its communication cable is incorrectly connected or short circuited. 2.Check whether its address code is correctly set. 3.Check the communication cable of its upper-level detector controller is properly connected.	There should not be two ultrasonic detectors with the same address connected using the same RS485 bus.
The ultrasonic detector fails to control the parking space indicator.	1.Check whether its indicator cable is incorrectly connected. 2.Check whether the indicator is damaged.	
If the fault persists after the above measures are taken, contact our customer service engineer. Do not uninstall the equipment by yourself, or the equipment may be damaged.		

Guangdong AKE Technology Co.,Ltd

Switchboard: +86 757-88361111(100 lines) Fax: +86 757-88361166

Website: http://www.ake.com.cn Email: ake@ake.com.cn

Special line for marketing: +86 757-88386288

Special line for customer service: 400 678 1126

Address: 3/F, Building 3, Area A, Hantian Tech Park, No. 17 Shenhai Road, Guicheng, Nanhai District, Foshan, Guangdong