mm [inch]

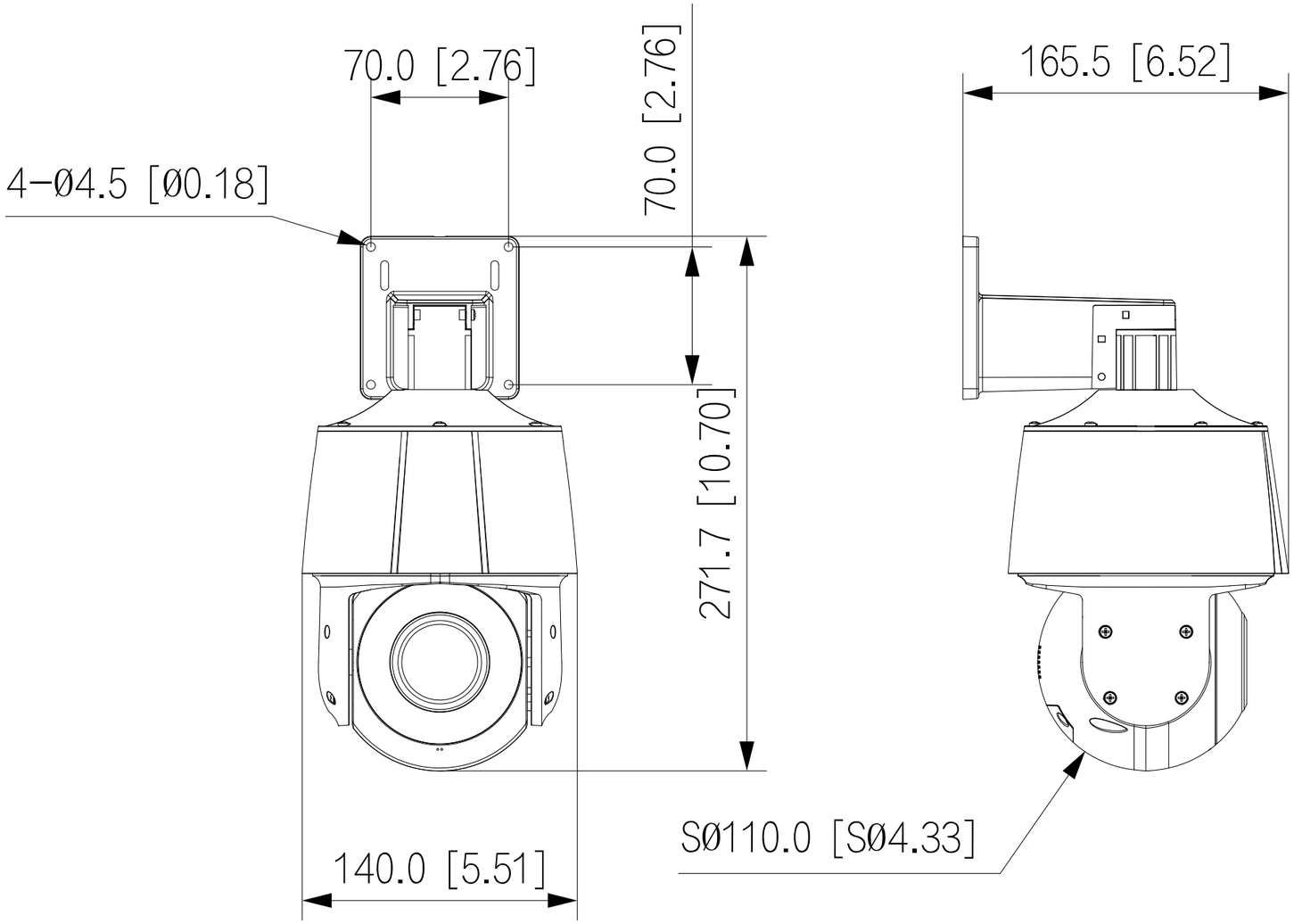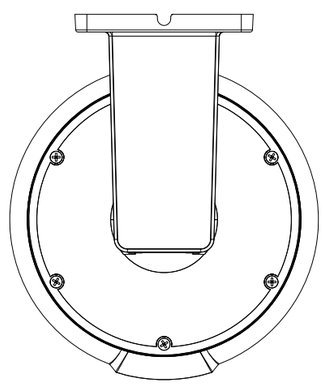
70.0 [2.76]
70.0 [2.76]
4-Ø4.5 [Ø0.18]
271.7 [10.70]
140.0 [5.51]
165.5 [6.52]
SØ110.0 [SØ4.33]