mm [inch]

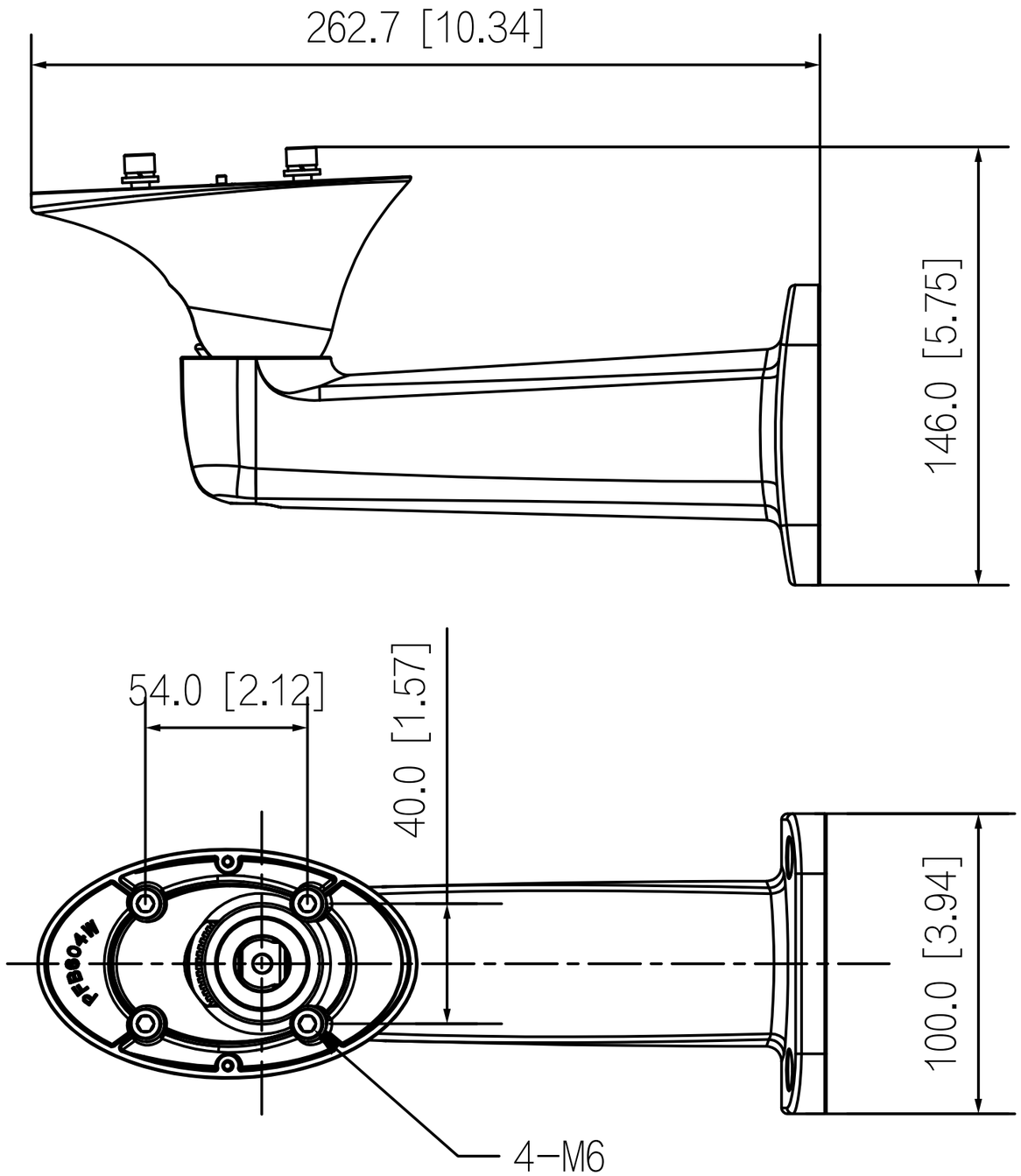
262.7 [10.34]
146.0 [5.75]
54.0 [2.12]
40.0 [1.57]
100.0 [3.94]
4−M6
PBG04W

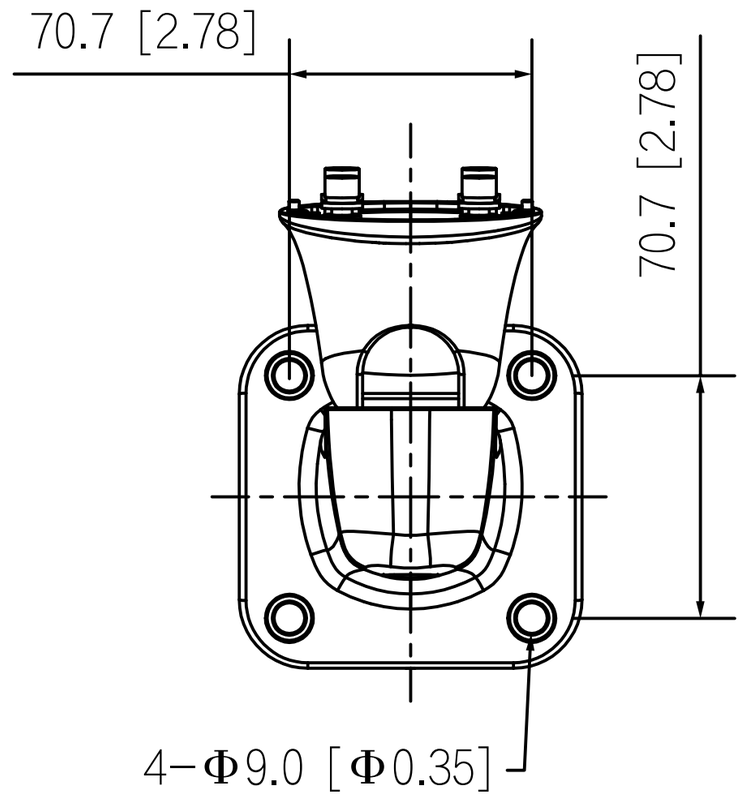
70.7 [2.78]
70.7 [2.78]
4−Φ9.0 [Φ0.35]