mm [inch]

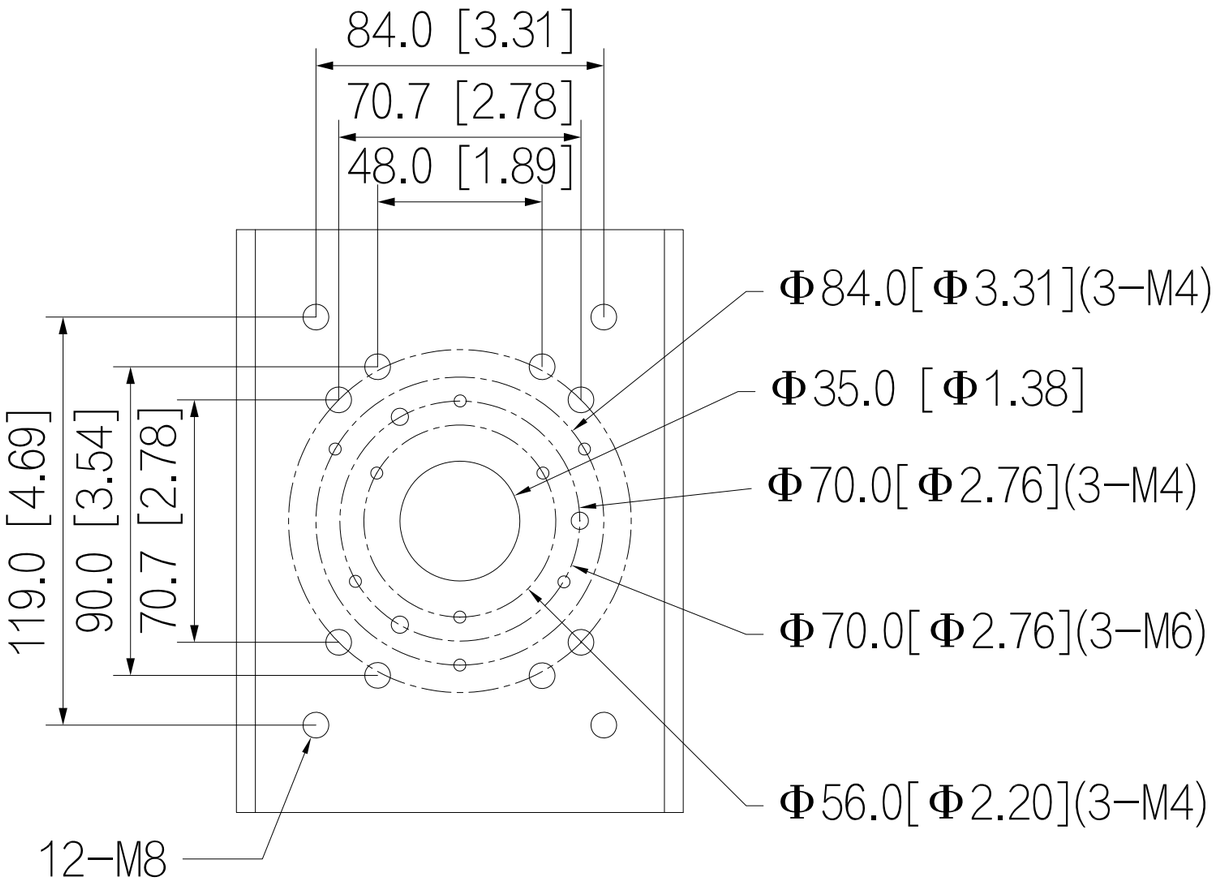
84.0 [3.31]
70.7 [2.78]
48.0 [1.89]
119.0 [4.69]
90.0 [3.54]
70.7 [2.78]
Φ84.0[Φ3.31](3−M4)
Φ35.0 [Φ1.38]
Φ70.0[Φ2.76](3−M4)
Φ70.0[Φ2.76](3−M6)
Φ56.0[Φ2.20](3−M4)
12−M8

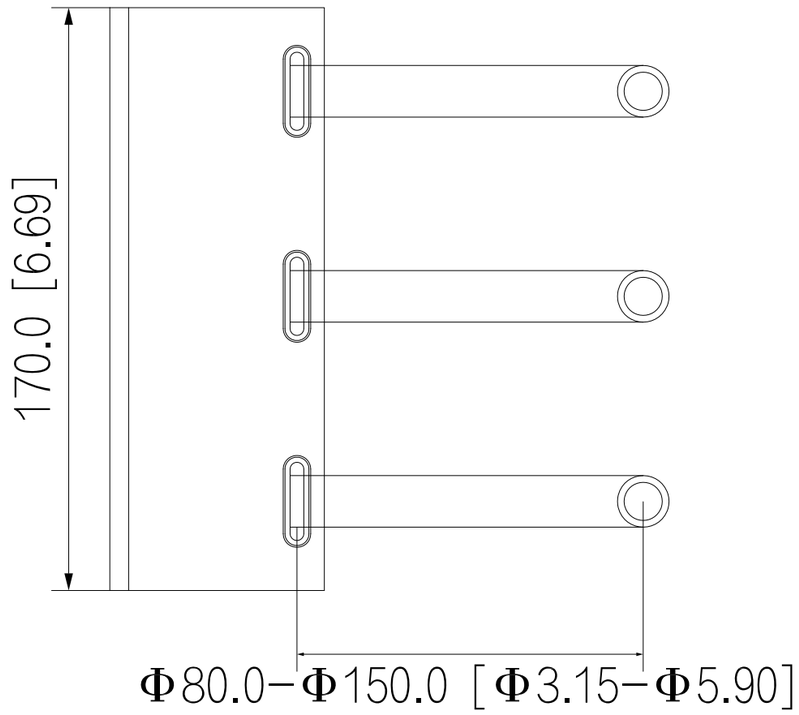
170.0 [6.69]
Φ80.0−Φ150.0 [Φ3.15−Φ5.90]

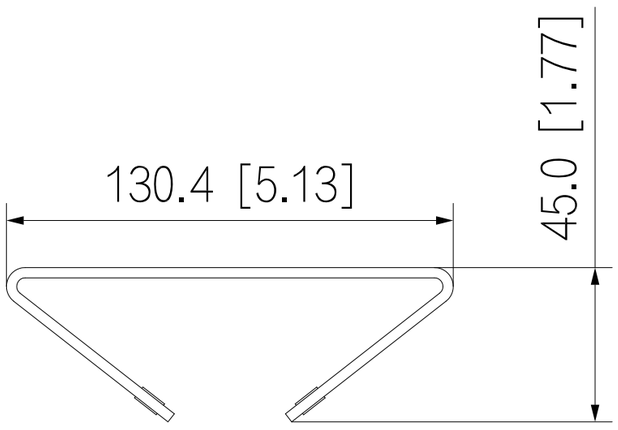
130.4 [5.13]
45.0 [1.77]