mm [inch]

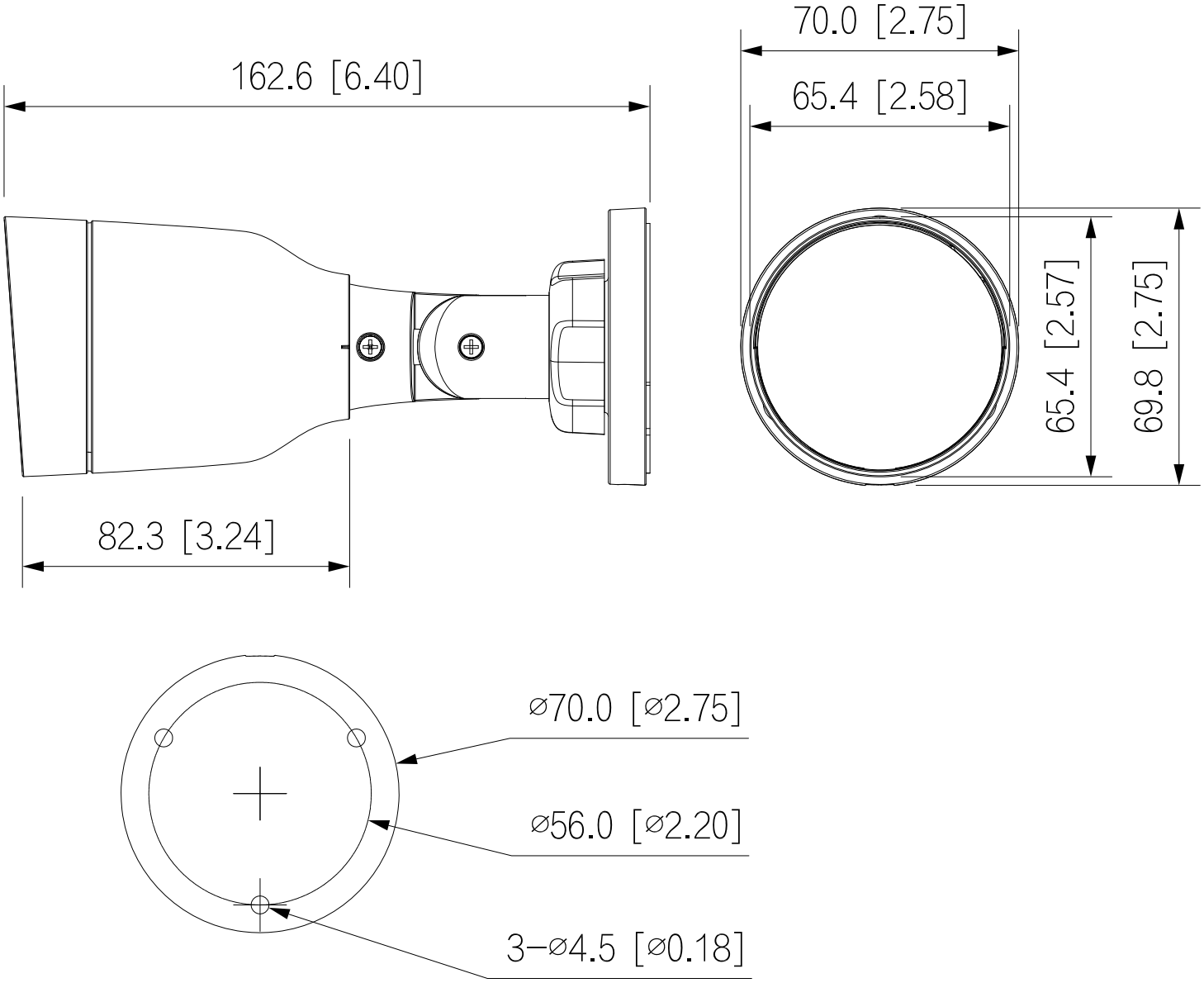
162.6 [6.40]
82.3 [3.24]
70.0 [2.75]
65.4 [2.58]
65.4 [2.57]
69.8 [2.75]
⌀70.0 [⌀2.75]
⌀56.0 [⌀2.20]
3−⌀4.5 [⌀0.18]