mm [inch]

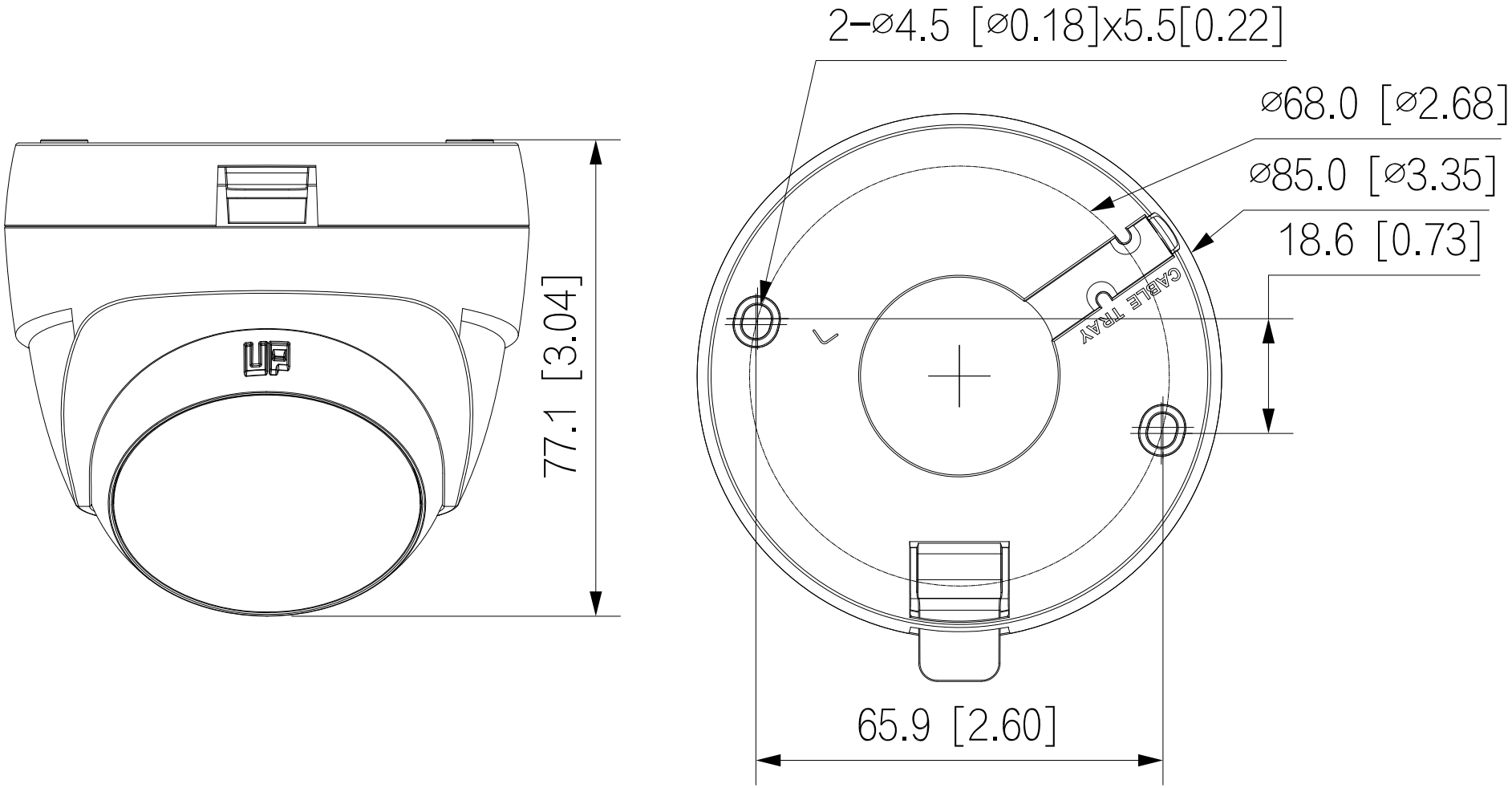
2-⌀4.5 [⌀0.18]x5.5[0.22]
⌀68.0 [⌀2.68]
⌀85.0 [⌀3.35]
18.6 [0.73]
CABLE TRAY
77.1 [3.04]
65.9 [2.60]