mm [inch]

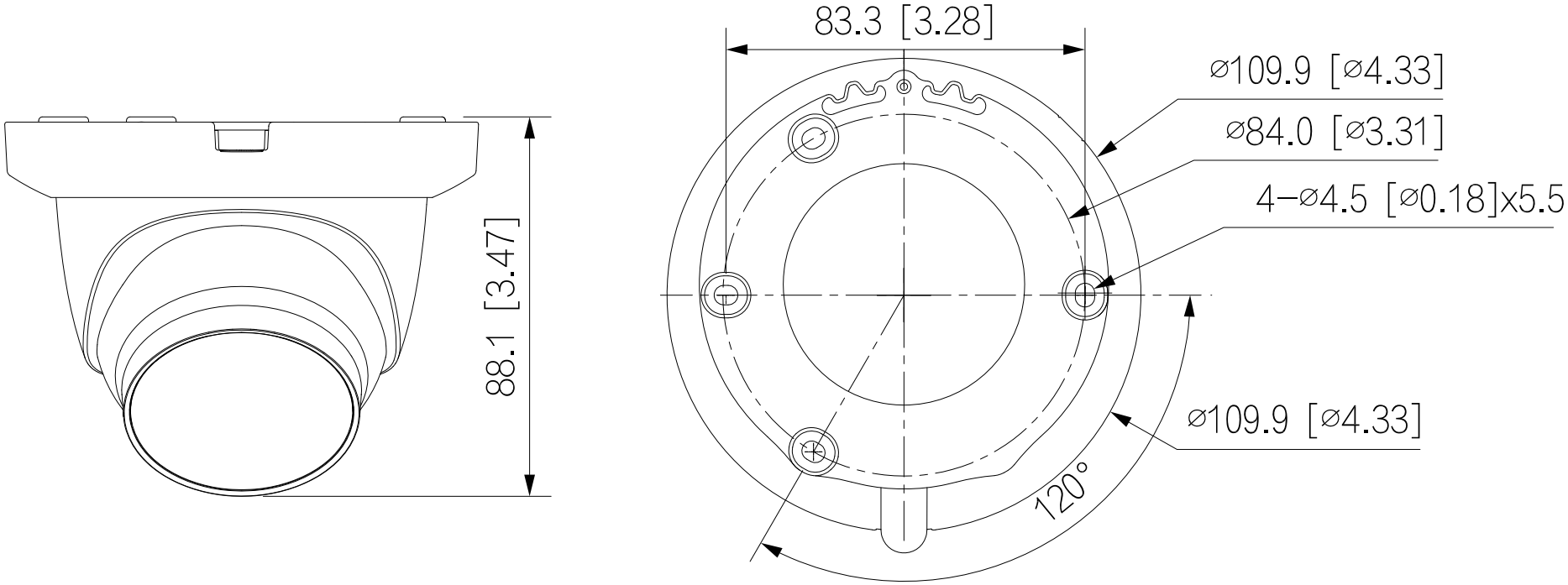
83.3 [3.28]
ø109.9 [ø4.33]
ø84.0 [ø3.31]
4−ø4.5 [ø0.18]x5.5
88.1 [3.47]
ø109.9 [ø4.33]
120°