mm [inch]

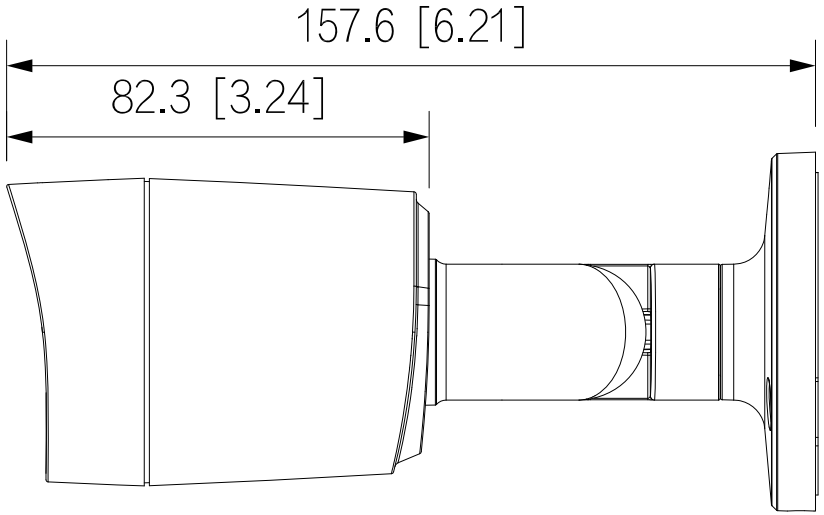
157.6 [6.21]
82.3 [3.24]

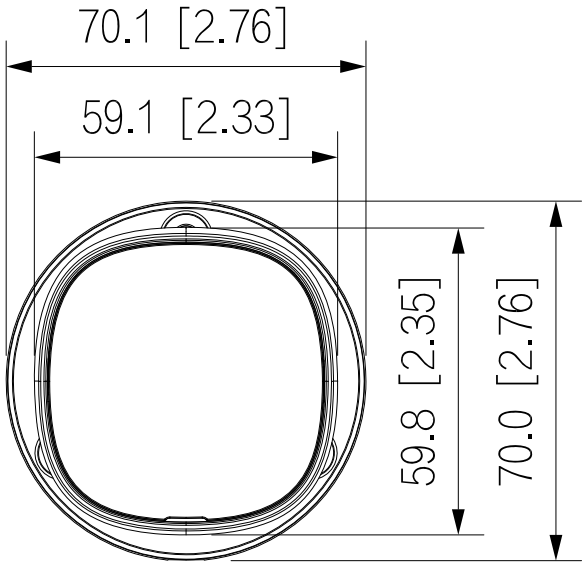
70.1 [2.76]
59.1 [2.33]
59.8 [2.35]
70.0 [2.76]

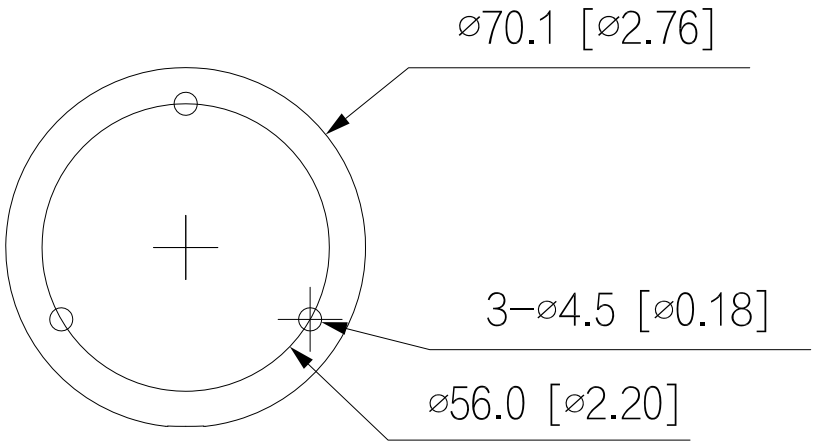
⌀70.1 [⌀2.76]
3−⌀4.5 [⌀0.18]
⌀56.0 [⌀2.20]