DH-IPC-HDBW5459E1-Z4E-IL-ATC

4MP Smart Dual Light Anti-Corrosion Vari-focal Vandal-proof Dome WizMind Network Camera

Xinghan ACUPICK ePoE WizMind

Launched by Dahua Technology, Dahua WizMind is a full portfolio of solutions composed of project-oriented products including IPC, IVSS,NVR, PTZ, XVR, Thermal and software platform which adopts industry-leading deep learning algorithms. Focusing on customer's requirements, WizMind provides precise, reliable and comprehensive AI solutions for verticals.

Series Overview

With its deep learning algorithms, the WizMind 5 Series camera offers advanced analytical capabilities for both audio and video. It integrates intelligent features such as video metadata, AcuPick, face detection, perimeter protection, and people counting. Powered by the Xinghan Large-Scale AI Models-Vision, the camera excels in object detection, recognition, and scene adaptation. Equipped with AI-ISP imaging technology, it offers enhanced night vision performance. The series is designed for durability, being dust-proof, waterproof, and vandal-proof, in compliance with IP67 and IK10 standards, though support for these certifications may vary across models.

Functions

Enhanced Anti-Corrosion Aluminum Alloy

The camera is engineered with an innovative alloy structure from which impurities have been removed. Its electrochemical corrosion resistance is significantly higher than that of conventional aluminum alloys. And its dual-reinforced surface forms a dense protective barrier. Certified to C5-H and NEMA 4X standards, it is ideal for high-humidity and high-salinity environments such as ports, islands, cross sea bridges, coastal buildings, or areas prone to sulfidation, nitridation, or acid rain.

- Enhanced anti-corrosion aluminum alloy enclosure safeguards camera in corrosive environments, ensuring great reliability and an extended service life.
- 4-MP 1/1.8" CMOS image sensor, low luminance, and high definition image.
- Outputs max 4 MP (2688 × 1520)@25/30 fps.
- Built-in multi-core light, the max IR distance is 80 m and the max warm light distance is 60 m.
- ROI, SVC, SMART H.264+/H.265+, AI H.264/H.265, encoding after filter, flexible coding, applicable to various bandwidth and storage environments.
- Rotation mode, WDR, 3D NR, HLC, BLC, digital watermarking, applicable to various monitoring scenes.
- With deep learning algorithm, it supports: AcuPick, video metadata, IVS, face detection, and people counting, etc.
- Alarm: 2 in, 1 out; audio: 1 in, 1 out; supports max 1 TB Micro SD card; built-in Mic.
- 12 VDC/PoE power supply; ePoE.
- IP67 and IK10 protection.

Xinghan Large-Scale AI Models-Vision

Xinghan Large-Scale AI Models-Vision seamlessly expands the storage and operational capacity of algorithmic models through the powerful integration of edge AI model algorithms and NPU computing power. Engineered with a lightweight transformer architecture and enhanced by model distillation and quantization techniques, it optimizes the computing power consumption of ViT operators. This enables the system to collaborate on multiple tasks simultaneously through joint inference between small and large models optimized for edge devices.

Smart Dual Light

Dahua Smart Dual Light technology adopts smart algorithm to detect targets. Usually, the IR illuminator is on at night; when the target appears in the monitoring area, the white light is on, and the camera records the full-color video and information of key events. That is, the camera links snapshot and video with full-color image. When the target is out of the monitoring area, the white light is off and the IR illuminator is on, which reduces light pollution efficiently.

AcuPick

This industry-leading search technology effectively utilizes both front-end and back-end intelligence to help with searching through massive

video data to quickly and conveniently locate targets with greater precision.

Protection (IP67, IK10, Wide Voltage)

IP67: The camera passes a series of strict test on dust and soak. It has dust-proof function, and the enclosure can work normally after soaking in 1 m deep water for 30 minutes.

IK10: The enclosure can stand the punch more than 5 times from a 5 kg hammer falling from a height of 40 cm (Impact energy is 20J).

Wide voltage: The camera allows ±30% (for some power supplies) input voltage tolerance (wide voltage range), and it is widely applied to outdoor environment with instable voltage.

Technical Specification

Camera

Image Sensor	1/1.8" CMOS
Max. Resolution	2688 (H) × 1520 (V)
ROM	4 GB
RAM	2 GB
Scanning System	Progressive
Electronic Shutter Speed	Auto/Manual 1/3 s–1/100,000 s
Min. Illumination	0.0007 lux@F1.8 (Color, 30 IRE) 0.0004 lux@F1.8 (B/W, 30 IRE) 0 lux (Illuminator on)
S/N Ratio	>56 dB
Illumination Distance	Up to 80 m (262.47 ft) (IR) Up to 60 m (196.85 ft) (Warm light)
Illuminator On/Off Control	Auto;Manual;Zoomprio
Illuminator Number	4 (Multi-core (IR + warm) light)
Angle Adjustment	Pan: 0°–355° Tilt: 0°–80° Rotation: 0°–355°

Lens

Lens Type	Motorized vari-focal
Lens Mount	Module
Focal Length	8 mm–32 mm
Max. Aperture	F1.6
Field of View	H: 41°–9°; V: 23°–16°; D: 48°–18°
Iris Control	Auto
Iris Control Type	P-Iris
Close Focus Distance	1.5 m (4.92 ft)

	Lens	Detect	Observe	Recognize	Identify
DORI Distance	W	154.5 m (506.89 ft)	61.8 m (202.76 ft)	30.9 m (101.38 ft)	15.4 m (50.52 ft)
	T	389.0 m (1276.25 ft)	155.6 m (510.50 ft)	77.8 m (255.25 ft)	38.9 m (127.62 ft)
	*DORI (Detect, Observe, Recognize, Identify) is a standard system (EN-62676-4) for defining the ability of a person viewing the video to distinguish persons or objects within a covered area. The numbers in this table do not reflect intelligent function distances. For intelligent function distances, refer to installation and commissioning manual/project design tool.				

Intelligence

IVS (Perimeter Protection)	Intrusion, tripwire, fast moving (the three functions support the classification and accurate detection of vehicle, animal and human); loitering detection, people gathering, parking detection, stay detection. Offers Perimeter Protection Large-Scale AI Models to extend the target detection range and reduce the rate of false alarm. Supports self-learning, it filters out false alarms.
SMD	SMD 4.0
AcuPick	Uses deep learning algorithms and works with back-end devices to accurately match targets, such as people, animal and motor vehicles, and search through live and recorded videos to quickly locate targets.
Face Detection	Face detection; snapshot; snapshot optimization; optimal face snapshot upload; face enhancement; face exposure; face attributes extraction including 6 attributes and 8 expressions; face snapshot set as face, one-inch photo or custom; snapshot strategies (real-time snapshot, quality priority and optimization snapshot); face angle filter; optimization time setting.
People Counting	Tripwire people counting, generating and exporting report (day/week/month/year); people counting in area and queue management, generating and exporting report (day/week/month); 4 rules can be set for tripwire, people counting in area and queue management.
Heat Map	Yes
Video Metadata	Motor vehicle, non-motor vehicle, face, and human body detection; snapshot; snapshot optimization; optimal face snapshot upload. Extraction of motor vehicle and non-motor vehicle attributes: extracts 6 attributes for motor vehicle and 6 attributes for non-motor vehicle. Extraction of face and human body attributes: extracts 6 attributes for face and 8 attributes for human body.
Smart Search	Work together with Smart NVR to perform refine intelligent search, event extraction and merging to event videos

Video

Video Compression	H.265; H.264; H.264H; H.264B; MJPEG (Only supported by the sub stream)
AI Coding	AI H.265; AI H.264 *Includes smart codec technology, Smart H.265+ and Smart H.264+
Video Frame Rate	Main stream: 2688 × 1520@(1–25/30 fps) Sub stream: 704 × 576@(1–25 fps)/704 × 480@(1–30 fps) Third stream: 1920 × 1080@(1–25/30 fps) Fourth stream: 1280 × 720@(1–25/30 fps) *The values above are the max. frame rates of each stream; for multiple streams, the values will be subjected to the total encoding capacity.
Streaming Capability	4 streams
Resolution	4M (2688 × 1520/2560 × 1440); 3M (2048 × 1536/2304 × 1296); 1080p (1920 × 1080); 1.3M (1280 × 960); 720p (1280 × 720); D1 (704 × 576/704 × 480); VGA (640 × 480); CIF (352 × 288/352 × 240)

Bit Rate Control	VBR;CBR
Video Bit Rate	H.264: 3 kbps–16384 kbps; H.265: 3 kbps–16384 kbps
Day/Night	Auto(ICR)/Color/B/W
BLC	Yes
HLC	Yes
WDR	140 dB
Scene Self-adaptation (SSA)	Yes
White Balance	Auto; natural; street lamp; outdoor; manual; regional custom
Gain Control	Auto/Manual
Noise Reduction	3D NR
Motion Detection	OFF/ON (4 areas, rectangular)
Region of Interest (RoI)	Yes (4 areas)
Image Stabilization	Electronic Image Stabilization (EIS)
Smart Illumination	Yes
Smart Dual Light	Yes
Defog	Yes
Image Rotation	0°/90°/180°/270° (Support 90°/270° with 4M (2688 × 1520) resolution and lower)
Mirror	Yes
Privacy Masking	4 mosaics or 8 color blocks
LDC	Yes

Audio

Built-in MIC	Yes, built-in Mic
Audio Compression	G.711a; G.711Mu; PCM; G.726; G.723

Alarm

Alarm Event	No SD card; SD card full; SD card error; network disconnection; IP conflict; illegal access; motion detection; video tampering; tripwire; intrusion; fast moving; loitering detection; people gathering; parking detection; scene changing; audio detection; voltage detection; external alarm; face detection; video metadata; SMD; people counting in area; stay detection; people counting; people number error detection; queue people number alarm; queue time alarm; security exception; defocus detection

Network

Network Port	RJ-45 (10/100 Enhancement Base-T)
SDK and API	Yes
Network Protocol	IPv4; IPv6; HTTP; TCP; UDP; ARP; RTP; RTSP; RTCP; RTMP; SMTP; FTP; SFTP; DHCP; DNS; DDNS; QoS; UPnP; NTP; Multicast; ICMP; IGMP; NFS; SAMBA; PPPoE; SNMP; P2P; Auto Registration
Interoperability	ONVIF (Profile S & Profile G & Profile T & Profile M); CGI
User/Host	20 (Total bandwidth: 80 M)
Storage	FTP; SFTP; Micro SD card (support max. 1 TB); NAS
Browser	IE: IE 11 and later; Chrome: Chrome 102 and later; Firefox: Firefox 88 and later
Management Software	DSS; DMSS; DoLynk Care
Mobile Client	iOS;Android
Security	Digest;WSSE;Account lockout;Security logs;IP/MAC filtering;Generation and importing of X.509 certification;syslog;HTTPS;802.1x;Trusted boot;Trusted execution;Trusted upgrade;Session security;Security warning

Function

Sound Warning	Offers 11 sound alarms and supports importing 10 custom sound alarms. Sound: 0–100 Play times can be set from 1 to 10.

Certification

Certifications	CE-LVD: EN62368-1 CE-EMC: Electromagnetic Compatibility Directive 2014/30/EU NEMA 4X

Port

Audio Input	1 channel (RCA port)
Audio Output	1 channel (RCA port)
Alarm Input	2 channels in: supports wet contact connection (max load 5 mA 3–5 VDC); supports dry contact connection
Alarm Output	1 channel out: wet contact, max load 300 mA 12 VDC

Power

Power Supply	12 VDC (±30%); PoE+ (802.3at); ePoE
Dual Power Backup	When the power adapter and PoE provide power at the same time, disconnect one of them. The device will continue to work, but will not restart.
Power Consumption	Basic: 3.7 W (12 VDC); 5 W (PoE); Max.: 12.9 W (12 VDC); 16.1 W (PoE) (IR on + WDR + intelligence on)
ePoE	Yes

Environment

Operating Temperature	–40 °C to +60 °C (–40 °F to +140 °F)
Operating Humidity	≤95% (RH), non-condensing
Storage Temperature	–40 °C to +60 °C (–40 °F to +140 °F)
Storage Humidity	≤95% (RH), non-condensing
Protection	IP67; IK10
Anti-corrosion Level	Professional Protection *The products are fitted with premium-level anti-corrosion protection, making them ideal for use in sensitive environments such as chemical plants, docks, and coastlines. They perform reliably in areas up to 2 km (1.24 mi) from the coast, as well as in regions prone to acid rain exposure.

Structure

Casing Material	Metal
Product Dimensions	118.0 mm × Φ159.0 mm (4.65" × Φ6.26")

Net Weight	1.16 kg (2.56 lb)
Gross Weight	1.36 kg (3.00 lb)

Ordering Information

Type	Model	Description
IP CAMERA	DH-IPC-HDBW5459E1-Z4E-IL-ATC	4MP Smart Dual Light Anti-Corrosion Vari-focal Vandal-proof Dome WizMind Network Camera
Accessories (Optional)	DH-PFA101H	Anti-corrosion Mount Adapter
	DH-PFB300CH	Anti-corrosion Ceiling Mount Bracket
	DH-PFA5510H	Anti-corrosion Pole Mount Bracket
	DH-PFA156H	Anti-corrosion Pole Mount Bracket
	G3416GW	G3/4" Water Joint
	DH-PFB302SH	Anti-corrosion Wall Mount Bracket
	DH-PFA138H	Anti-corrosion Junction Box
	DH-PFM320D-EN	DC12V2A power adapter
	PFM900-E	Integrated Mount Tester
	DHI-TF-P100/1TB	MicroSD Card

Accessories

Optional:

DH-PFA101H
Anti-corrosion Mount Adapter

DH-PFB300CH
Anti-corrosion Ceiling Mount Bracket

DH-PFA5510H
Anti-corrosion Pole Mount Bracket

DH-PFA156H
Anti-corrosion Pole Mount Bracket

G3416GW
G3/4" Water Joint

DH-PFB302SH
Anti-corrosion Wall Mount Bracket

DH-PFA138H
Anti-corrosion Junction Box

DH-PFM320D-EN
DC12V2A power adapter

PFM900-E
Integrated Mount Tester

Optional:

DHI-TF-P100/1TB
MicroSD Card

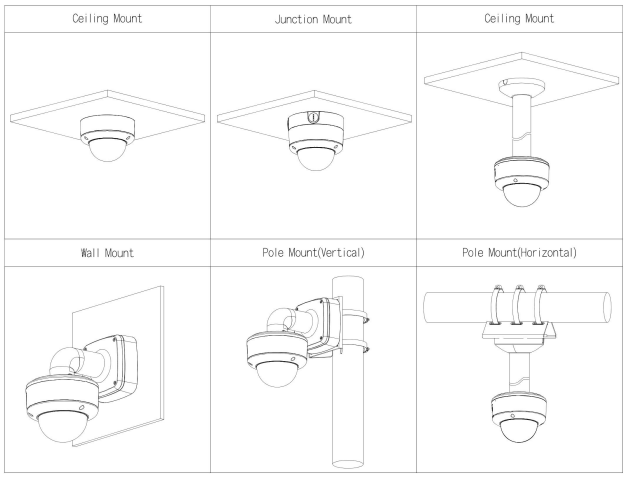

Rev 002.000

©Dahua. All rights reserved. Design and specifications are subject to change without notice.
Pictures in the document are for reference only, and the actual product shall prevail.