# DH-HAC-HFW1809TLM-A-LED

## 4K Full-color HDCVI Fixed-focal Bullet Camera

Full-color

* The parameters and datasheets below can only be applied to 1809-S2 series.

- Max. 15 fps@4K.
- 3D NR.
- 24/7 color imaging.
- Smart Warm Light Illumination.
- 40 m illumination distance.
- Super Adapt.
- Built-in MIC.
- 3.6 mm fixed lens (2.8 mm optional).
- CVI/CVBS/AHD/TVI switchable.
- IP67, 12 VDC.

## Series Overview

The Lite Series is a great choice for consumers looking for high quality monitoring products at a reasonable price. Its low cost and high performance make it ideal for residential areas and SMB solutions. This series is equipped with a wide range of technologies, such as full-color and starlight, providing various solutions for different scenarios.

## Functions

### Full-color

With its advanced image processing algorithm and capability to absorb large quantities of light, the camera provides 24/7 color monitoring that collects clear and highly detailed information, significantly increasing the reliability of the human and vehicle images that are collected as evidence for intelligent analysis.

### Smart Light+

Equipped with advanced LEDs and beam processing technology, the camera effectively reduces interference of stray light, ensuring concentrated illumination within the lens's field of view. This allows the camera to easily produce clear images that reveal the fine details of targets even in low light conditions.

### Smart Area Lighting

Automatically adjusts the intensity of the brightness and exposure for the left and right areas in the video based on the proportion and position of the targets to reveal more details in the image.

### Built-in Mic

Audio signal transmission over coaxial cables is supported by the HDCVI camera. It adopts a unique audio processing and transmission technology that restores source audio and eliminates noise, ensuring the quality and reliability of the audio information that is collected. This becomes important for video surveillance applications that use audio information as a type of supplementary evidence.

### Super Adapt

With its intelligent algorithm, the camera automatically adjusts its parameters to provide optimal performance and vivid images.

### Advanced 3DNR

Dahua's advanced 3DNR technology reduces image noise with little to no impact on image sharpness, especially in poor lighting conditions. It detects the noise, and compares the sequential frames to effectively reduce the noise. It also makes efficient use of bandwidth, saving on storage space.

### Protection (IP67, Wide Voltage)

IP67: The camera passed a series of rigorous dust and immersion tests. Its enclosure is both dust-proof and waterproof, and can function normally while being immersed in 1 m deep water for up to 30 minutes.

Wide voltage: The camera has ±30% input voltage tolerance (for some power supplies) and a wide voltage range, making it suitable for a variety of outdoor scenarios.

## Technical Specification

### Camera

| | |
|---|---|
| Image Sensor | 4K CMOS |
| Max. Resolution | 3840 (H) × 2160 (V) |
| Electronic Shutter Speed | PAL: 1/25 s–1/100,000 s<br>NTSC: 1/30 s–1/100,000 s |
| Min. Illumination | 0.0005 lux@F1.0 (Color, 30 IRE)<br>0.00005 lux@F1.0 (B/W, 30 IRE)<br>0 lux (Illuminator on) |
| S/N Ratio | >65 dB |
| Illumination Distance | Warm light: 40 m (131.23 ft) |
| Illuminator On/Off Control | Auto/Manual |
| Illuminator Number | 4 (Warm light) |
| Angle Adjustment | Pan: 0°–360°<br>Tilt: 0°–90°<br>Rotation: 0°–360° |

### Lens

| | |
|---|---|
| Lens Type | Fixed-focal |
| Lens Mount | M12 |
| Focal Length | 2.8 mm; 3.6 mm |
| Max. Aperture | F1.0 |
| Field of View | 2.8 mm: H: 109.6°; V: 57.5°; D: 131°<br>3.6 mm: H: 88.2°; V: 47.6°; D: 104.5° |
| Close Focus Distance | 2.8 mm: 2.0 m (6.56 ft)<br>3.6 mm: 2.7 m (8.86 ft) |

| | Lens | Detect | Observe | Recognize | Identify |
|---|---|---|---|---|---|
| DORI Distance | 2.8 mm | 88.0 m ( 288.71 ft) | 35.2 m ( 115.49 ft) | 17.6 m ( 57.74 ft) | 8.8 m ( 28.87 ft) |
| | 3.6 mm | 104.0 m ( 341.21 ft) | 41.6 m ( 136.48 ft) | 20.8 m ( 68.24 ft) | 10.4 m ( 34.12 ft) |
| | *DORI (Detect, Observe, Recognize, Identify) is a standard system (EN-62676-4) for defining the ability of a person viewing the video to distinguish persons or objects within a covered area. The numbers in this table do not reflect intelligent function distances. For intelligent function distances, refer to installation and commissioning manual/project design tool. | | | | |

| | |
|---|---|
| ABF | Yes |

### Video

| | |
|---|---|
| Video Frame Rate | CVI:<br>PAL: 4K@15 fps<br>NTSC: 4K@15 fps<br>AHD:<br>PAL: 4K@15 fps<br>NTSC: 4K@15 fps<br>TVI:<br>PAL: 4K@15 fps<br>NTSC: 4K@15 fps<br>CVBS:<br>PAL: 960H<br>NTSC: 960H |
| Resolution | 4K (3840 × 2160); 960H (960 × 576/960 × 480) |
| Day/Night | Color |
| BLC | BLC; HLC; WDR |
| WDR | WDR |
| White Balance | Auto |
| Gain Control | Auto/Manual |
| Noise Reduction | 3D NR |
| Illumination Mode | Smart Light |
| Mirror | Yes |

### Certification

| | |
|---|---|
| Certifications | CE-LVD: EN 62368-1<br>CE-EMC: EN 55032; EN 55035 |

### Audio

| | |
|---|---|
| Built-in Mic | Yes |
| Camera Audio | CVI |
| Pick-up Distance | 8 m (26.25 ft) |

### Port

| | |
|---|---|
| Video Output | Video output choices of CVI/TVI/AHD/CVBS by one BNC port (DIP Switch) |

### Power

| | |
|---|---|
| Power Supply | 12 VDC (±30%) |
| Power Consumption | Max 7.66 W (12 VDC, LED on) |

### Environment

| | |
|---|---|
| Operating Temperature | –40 °C to +60 °C (–40 °F to +140 °F) |
| Operating Humidity | <95% (RH), non-condensing |
| Storage Temperature | –40 °C to +60 °C (–40 °F to +140 °F) |
| Storage Humidity | <95% (RH), non-condensing |
| Protection | IP67 |
| Anti-corrosion Level | Basic Protection<br>*The products are designed for general use and are applicable even in areas with no specific requirements for anti-corrosion protection. |

### Structure

| | |
|---|---|
| Casing Material | Metal front cover + plastic rear barrel + metal bracket |
| Product Dimensions | 198.4 mm × 80.2 mm × 76.2 mm (7.81" × 3.16" × 3.00") (L × W × H)) |
| Net Weight | 0.32 kg (0.71 lb) |
| Gross Weight | 0.49 kg (1.08 lb) |
| Installation | Wall mount; ceiling mount; vertical pole mount |

## Ordering Information

| Type | Model | Description |
|---|---|---|
| HDCVI CAMERA | DH-HAC-HFW1809TLMN-A-LED | 4K Full-color HDCVI Fixed-focal Bullet Camera,NTSC |
| | DH-HAC-HFW1809TLMP-A-LED | 4K Full-color HDCVI Fixed-focal Bullet Camera,PAL |

| Type | Model | Description |
|---|---|---|
| Accessories (Optional) | G3416GW | G3/4" Water Joint |
| | DH-PFA151 | Corner Mount Bracket |
| | DH-PFA130-E | Water-proof Junction Box |
| | DH-PFA157 | Pole Mount Bracket |
| | DH-PFA134 | Junction Box |
| | DH-PFM800-4K | 1 Channel Passive HDCVI Balun |
| | DH-PFM321-EN | DC12V1A power adapter |
| | DH-PFM320D-EN | DC12V2A power adapter |
| | PFM904 | Integrated Mount Tester |

## Dimensions (mm[inch])

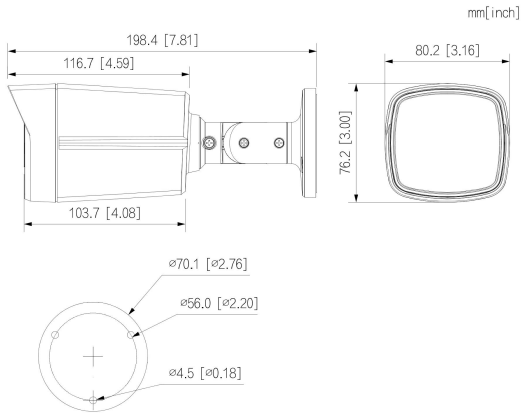


## Accessories

Optional:

DH-PFA130-E
Water-proof Junction Box

DH-PFA134
Junction Box

DH-PFA151
Corner Mount Bracket

DH-PFA157
Pole Mount Bracket

DH-PFM320D-EN
DC12V2A power adapter

DH-PFM321-EN
DC12V1A power adapter

DH-PFM800-4K
1 Channel Passive HDCVI Balun

G3416GW
G3/4" Water Joint

PFM904
Integrated Mount Tester

| Ceiling Mount | Wall Mount | Pole Mount(Vertical) |
|---|---|---|
| 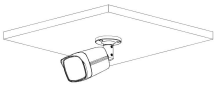 | 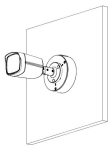 | 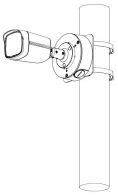 |


© 2025 Dahua. All rights reserved. Design and specificatons are subject to change without notce.
Pictures in the document are for reference only, and the actual product shall prevail.