DH-HAC-HDW1549XM-A-PRO

5MP WizColor HDCVI Fixed-focal Eyeball Camera

* The parameters and datasheets below can only be applied to 1549 series.
* In order to use the 5 MP 16:9 HDCVI camera, the firmware of XVR must be upgraded to V4.001.0000001.0.R.200908 or later version.

- 24/7 color imaging, max 25 fps@5 MP (16:9 video output).
- AI-ISP.
- Distortion Correction.
- Smart Light+.
- 50 m illumination distance.
- Super Adapt, 130 dB true WDR, 3D NR.
- Built-in Dual Mic.
- Quick-to-install eyeball saves installation time.
- 3.6 mm fixed lens (2.8 mm optional).
- CVI/CVBS/AHD/TVI switchable.
- IP67, 12 VDC.

Series Overview

The Lite Series is a great choice for consumers looking for high quality monitoring products at a reasonable price. Its low cost and high performance make it ideal for residential areas and SMB solutions. This series is equipped with a wide range of technologies, such as full-color and starlight, providing various solutions for different scenarios.

Functions

WizColor Technology

Dahua WizColor Technology seamlessly combines with the powerful AI-ISP and large aperture in cameras. This unique integration enables cameras to effortlessly capture high-quality images with vibrant colors during nighttime scenarios, ensuring fine details are preserved and minimizing motion blur. Unlike traditional self-illuminating cameras, Dahua WizColor Technology maximizes the utilization of weak light sources, such as moonlight and city lights reflected in the sky, delivering captivating full-color images of the entire scene. It also ensures that monitoring distances are not compromised at night due to limited illumination ranges, facilitating full-color image capture even over long distances.

AI-ISP

With AI ISP technology, the camera is able to easily adapt to scenes, producing high quality images that reveal the fine details of targets.

Distortion Correction

With advanced distortion correction algorithm, Dahua Distortion Correction corrects the image distortion in both horizontal and vertical directions to be consistent with the actual situation.

Built-in Dual Mic

Equipped with Dual Mic audio processing technology combined with intelligent noise reduction algorithms, HDCVI cameras effectively suppress environmental background noise and enhance audio clarity and pickup distance, ensuring the authenticity and reliability of the captured audio information. This technology protects the integrity of audio evidence in video surveillance, making it particularly suitable for scenes that require both audio and videos for verification.

Full-color

With its advanced image processing algorithm and capability to absorb large quantities of light, the camera provides 24/7 color monitoring that collects clear and highly detailed information, significantly increasing the reliability of the human and vehicle images that are collected as evidence for intelligent analysis.

Smart Light+

Equipped with advanced LEDs and beam processing technology, the camera effectively reduces interference of stray light, ensuring concentrated illumination within the lens's field of view. This allows the camera to easily produce clear images that reveal the fine details of targets even in low light conditions.

Technical Specification

Camera

Image Sensor	5 MP CMOS
Max. Resolution	2880 (H) × 1620 (V)
Scanning System	Progressive
Electronic Shutter Speed	PAL: 1/25 s–1/100,000 s NTSC: 1/30 s–1/100,000 s
Min. Illumination	0.0001 lux@F1.0 (Color, 30 IRE) 0.00001 lux@F1.0 (B/W, 30 IRE) 0 lux (Illuminator on)
S/N Ratio	>65 dB
Illumination Distance	Warm light: 50 m (164.04 ft)
Illuminator On/Off Control	Auto/Manual
Illuminator Number	4 (Warm light)
Angle Adjustment	Pan: 0°–360° Tilt: 0°–78° Rotation: 0°–360°

Lens

Lens Type	Fixed-focal
Lens Mount	M12
Focal Length	2.8 mm; 3.6 mm
Max. Aperture	F1.0
Field of View	2.8 mm: H: 109.6°; V: 57.5°; D: 131° 3.6 mm: H: 88.2°; V: 47.6°; D: 104.5°
Iris Control	Fixed
Close Focus Distance	2.8 mm: 2.0 m (6.56 ft) 3.6 mm: 3.0 m (9.84 ft)

	Lens	Detect	Observe	Recognize	Identify
DORI Distance	2.8 mm	66.0 m (216.54 ft)	26.4 m (86.61 ft)	13.2 m (43.31 ft)	6.6 m (21.65 ft)
	3.6 mm	78.0 m (255.91 ft)	31.2 m (102.36 ft)	15.6 m (51.18 ft)	7.8 m (25.59 ft)
	*DORI (Detect, Observe, Recognize, Identify) is a standard system (EN-62676-4) for defining the ability of a person viewing the video to distinguish persons or objects within a covered area. The numbers in this table do not reflect intelligent function distances. For intelligent function distances, refer to installation and commissioning manual/project design tool.				

Video

Video Frame Rate	CVI: PAL: 5M@25 fps; 5M@12.5 fps NTSC: 5M@25 fps; 5M@10 fps AHD: PAL: 4M@25 fps NTSC: 4M@30 fps TVI: PAL: 5M@20 fps NTSC: 5M@20 fps CVBS: PAL: 960H NTSC: 960H
Resolution	5M (2880 × 1620); 4M (2560 × 1440); 960H (960 × 576/960 × 480); TVI 5M 16:9 (2960 × 1665)
Day/Night	Color
BLC	BLC; HLC; WDR
WDR	130 dB
White Balance	Auto
Gain Control	Auto
Noise Reduction	3D NR
Motion Detection	Yes (It needs to be controlled through the XVR)
Illumination Mode	Smart Light
Mirror	Yes (It needs to be controlled through the XVR)

Certification

Certifications	CE-LVD: EN 62368-1 CE-EMC: EN 55032; EN 55035

Audio

Built-in Mic	Yes, built-in dual Mic
Camera Audio	CVI
Pick-up Distance	12 m (39.37 ft)

Port

Video Output	Video output choices of CVI/TVI/AHD/CVBS by one BNC port (DIP Switch)

Power

Power Supply	12 VDC (±30%)
Power Consumption	Max 5.9 W (12 VDC, LED on)

Environment

Operating Temperature	–40 °C to +60 °C (–40 °F to +140 °F)
Operating Humidity	<95% (RH), non-condensing
Storage Temperature	–40 °C to +60 °C (–40 °F to +140 °F)
Storage Humidity	<95% (RH), non-condensing
Protection	IP67
Anti-corrosion Level	Basic Protection *The products are designed for general use and are applicable even in areas with no specific requirements for anti-corrosion protection.

Structure

Casing Material	Metal
Product Dimensions	Φ106.0 mm × 93.2 mm (Φ4.17" × 3.67")
Net Weight	0.50 kg (1.10 lb)
Gross Weight	0.63 kg (1.39 lb)
Installation	Wall mount; ceiling mount; vertical pole mount

Ordering Information

Type	Model	Description
HDCVI CAMERA	DH-HAC-HDW1549XMN-A-PRO	5MP WizColor HDCVI Fixed-focal Eyeball Camera,NTSC
	DH-HAC-HDW1549XMP-A-PRO	5MP WizColor HDCVI Fixed-focal Eyeball Camera,PAL
Accessories (Optional)	DH-PFA109	Mount Adapter
	DH-PFB220C	Ceiling Mount Bracket
	DH-PFA151	Corner Mount Bracket
	DH-PFB305W	Wall Mount Bracket
	DH-PFA150	Pole Mount Bracket
	DH-PFA156	Pole Mount Bracket
	DH-PFB2204W	Wall Mount Bracket
	G3416GW	G3/4" Water Joint
	DH-PFA130-E	Water-proof Junction Box
	DH-PFM800-4K	1 Channel Passive HDCVI Balun
	DH-PFM321-EN	DC12V1A power adapter
	DH-PFM325D-1210EN	DC12V 1A Power Adapter
	DH-PFM320D-EN	DC12V2A power adapter
	PFM904	Integrated Mount Tester

Accessories

Optional:

DH-PFA109
Mount Adapter

DH-PFB220C
Ceiling Mount Bracket

DH-PFA151
Corner Mount Bracket

DH-PFB305W
Wall Mount Bracket

DH-PFA150
Pole Mount Bracket

DH-PFA156
Pole Mount Bracket

DH-PFB2204W
Wall Mount Bracket

G3416GW
G3/4" Water Joint

DH-PFA130-E
Water-proof Junction Box

Optional:

DH-PFM800-4K
1 Channel Passive HDCVI Balun

DH-PFM321-EN
DC12V1A power adapter

DH-PFM325D-1210EN
DC12V 1A Power Adapter

DH-PFM320D-EN
DC12V2A power adapter

PFM904
Integrated Mount Tester

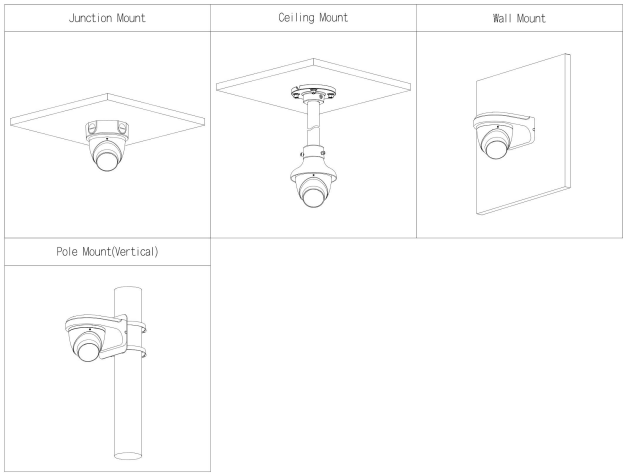

Dimensions (mm[inch])

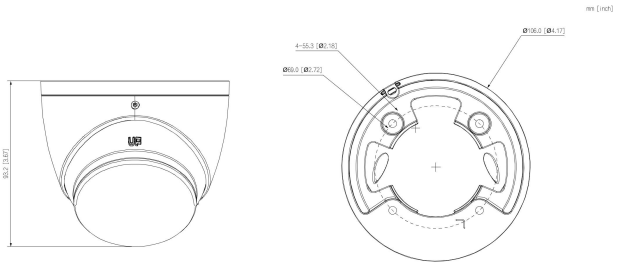

Rev 002.000 ©Dahua. All rights reserved. Design and specifications are subject to change without notice.
Pictures in the document are for reference only, and the actual product shall prevail.