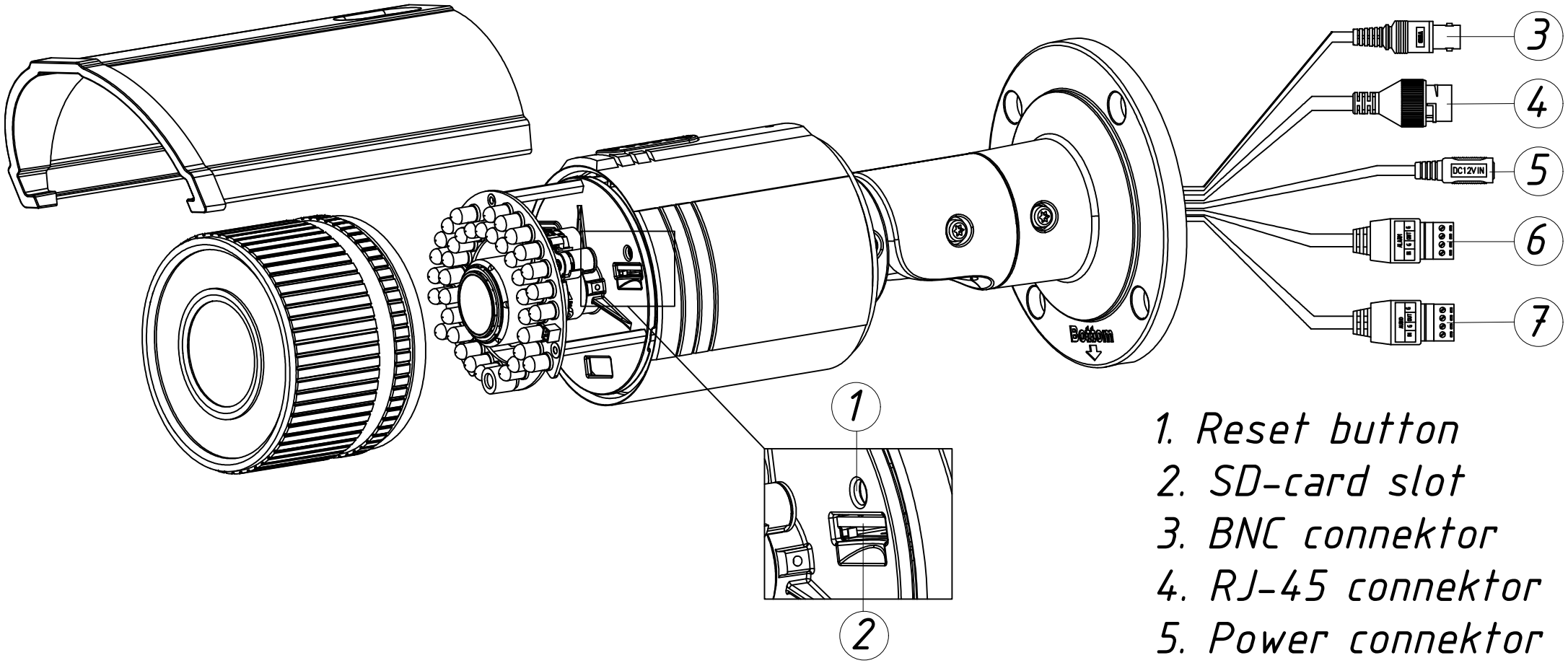

1. Reset button
2. SD-card slot
3. BNC connektor
4. RJ-45 connektor
5. Power connektor
6. Alarm connektor
7. Audio connektor